SAGI - BASE REFRIGERATA T.N. lt. 540 3 PORTE+2 CASSETTI
KMRC2A - 15-02-2003 » 02-10-2004

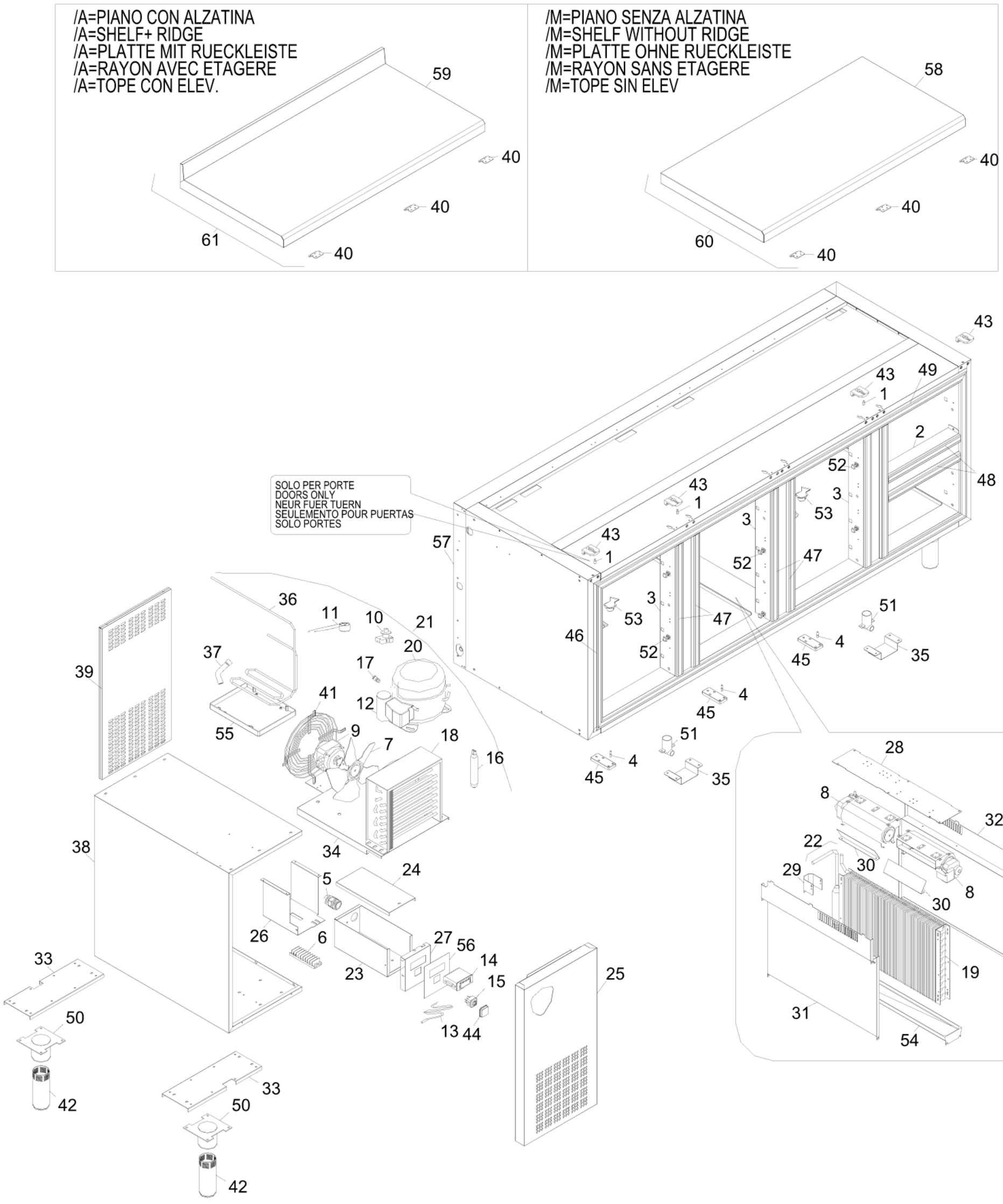

Modello Typ Model Modele Modelo
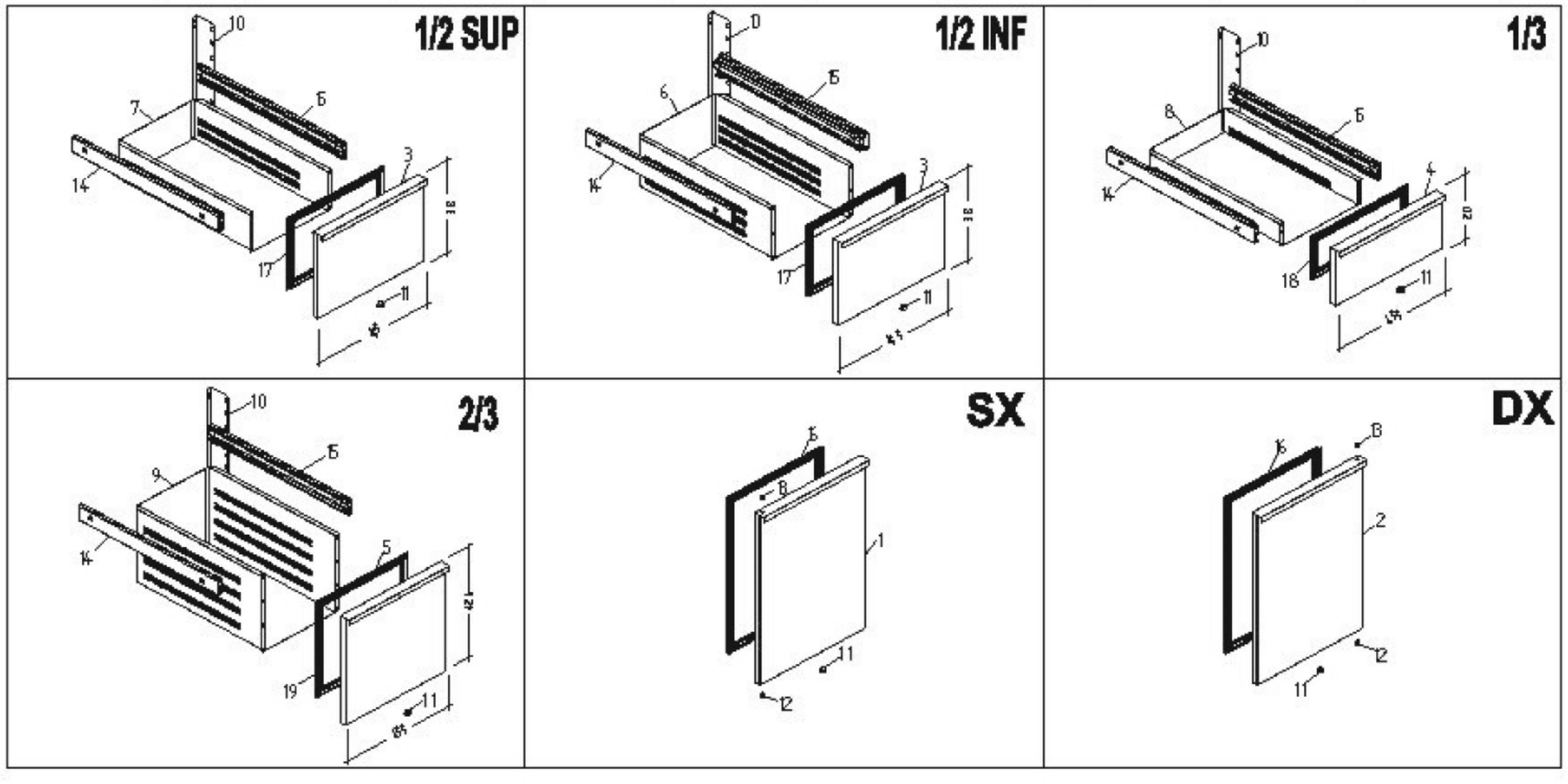
		KMRA KMRAA KMRAM	KMRA2 KMRA2A KMRA2M	KMRA4 KMRA4A KMRA4M	KMRB KMRBA KMRBM	KMRB2 KMRB2A KMRB2M	KMRB4 KMRB4A KMRB4M	KMRB6 KMRB6A KMRB6M	KMRB11 KMRB11A KMRB11M	KMRC KMRCA KMRCM	KMRC2 KMRC2A KMRC2M	KMRC4 KMRC4A KMRC4M	KMRC6 KMRC6A KMRC6M	KMRC11 KMRC11A KMRC11M
Num.cassetti Schubladd Drawers Tiroirs Gabetas	1/2SUP	-	1	2	-	1	2	3	-	-	1	2	3	-
	1/2INF	-	1	2	-	1	2	3	-	-	1	2	3	-
	1/3	-	-	-	-	-	-	-	1	-	-	-	-	1
	2/3	-	-	-	-	-	-	-	1	-	-	-	-	1
Porte Türen Doors Portes Puertas	DX	1	-	-	1	-	-	-	2	1	-	-	-	3
	SX	1	1	-	2	2	1	-	-	3	3	2	1	-