016 40 004 2926T 271097 DONADINI & C

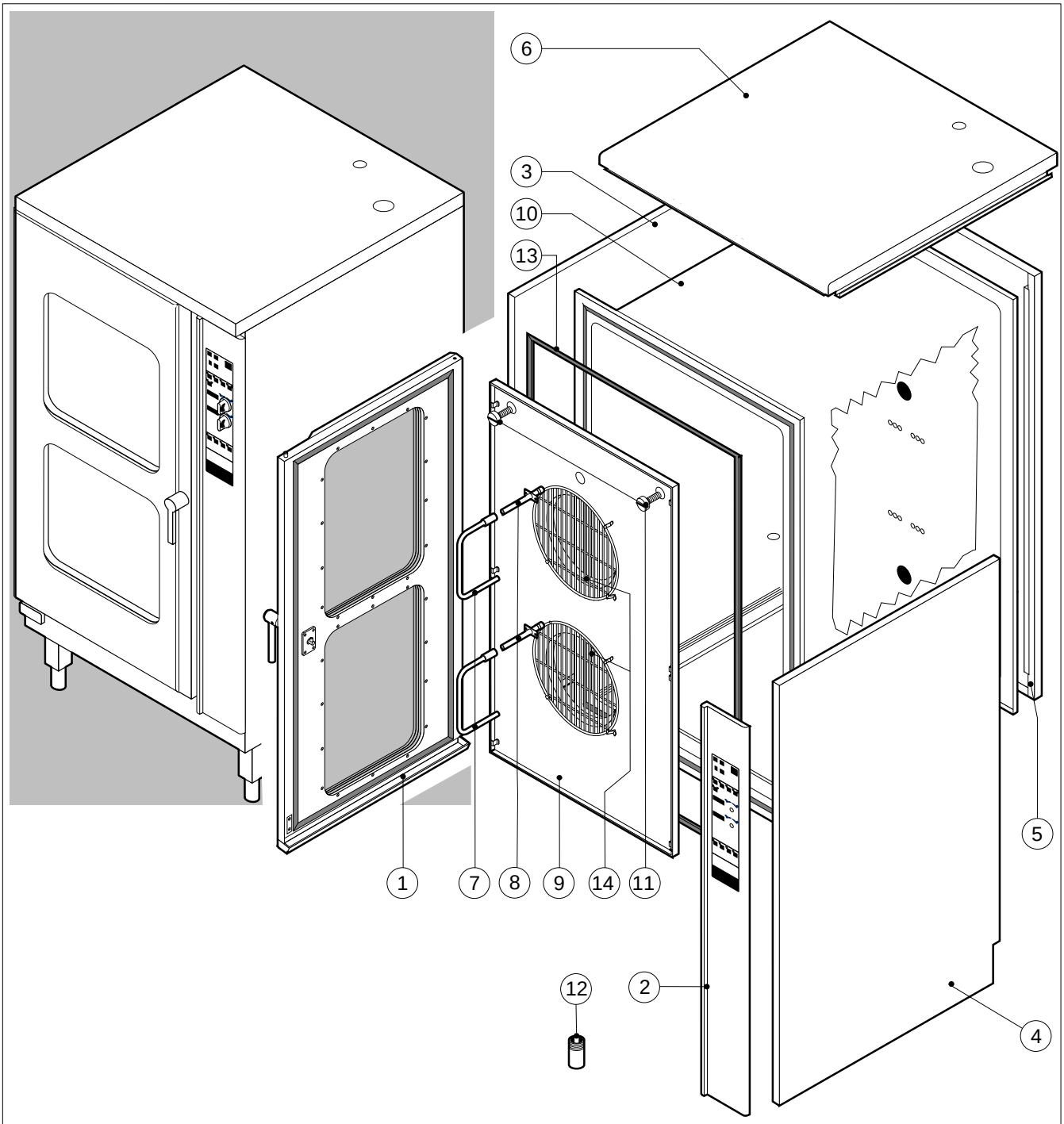

POS.	CODE	PIECES	DESCRIPTION
1	R10104260	1	DOOR ASSEMBLY
2	R10104870	1	CONTROL PANEL WITH PLATE
3	R10201600	1	LEFT SIDE PANEL
4	R10201620	1	RIGHT SIDE PANEL
5	R10201630	1	REAR PANEL
6	R10206250	1	COVER PANEL
7	R10206480	2	SPRITZER EXTENSION
8	R10206540	2	SPRITZER UNION
9	R10207281	1	FAN GUARD PANEL ASSEMBLY
10	R10207511	1	COOKING CABINET ASSEMBLY
11	R58003100	2	FAN GUARD FASTENING SCREW
12	R69070070	4	FOOT 1"1/4x120
13	R70041010	1	FRONT GASKET
14	R75300060	2	FAN GUARD GRID Ø 270

POS.	CODE	PIECES	DESCRIPTION

EDIZIONE 0297

VE 120 D tav. A

016 40 004 2927 031298 DONADINI & C

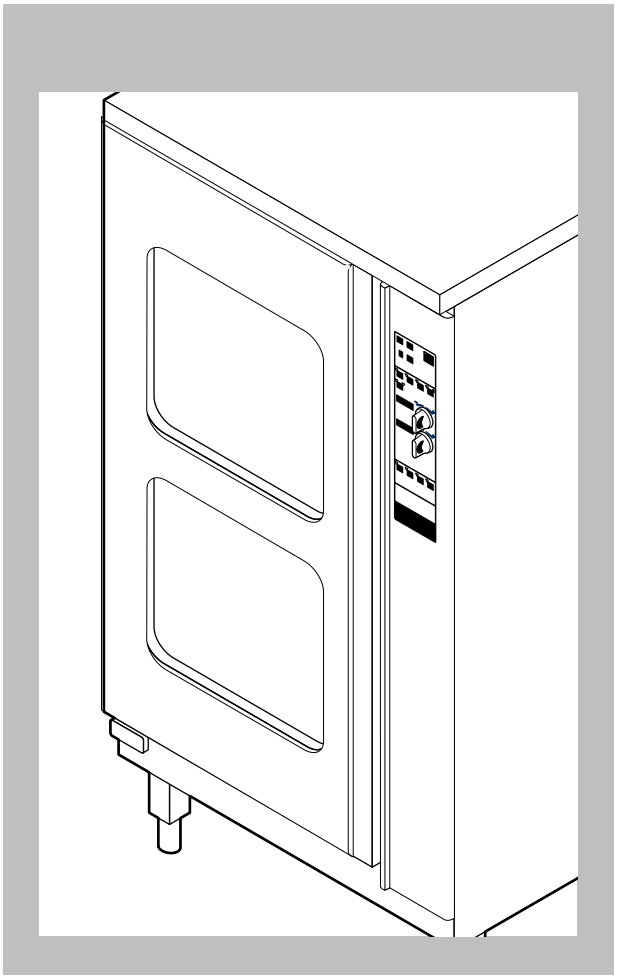

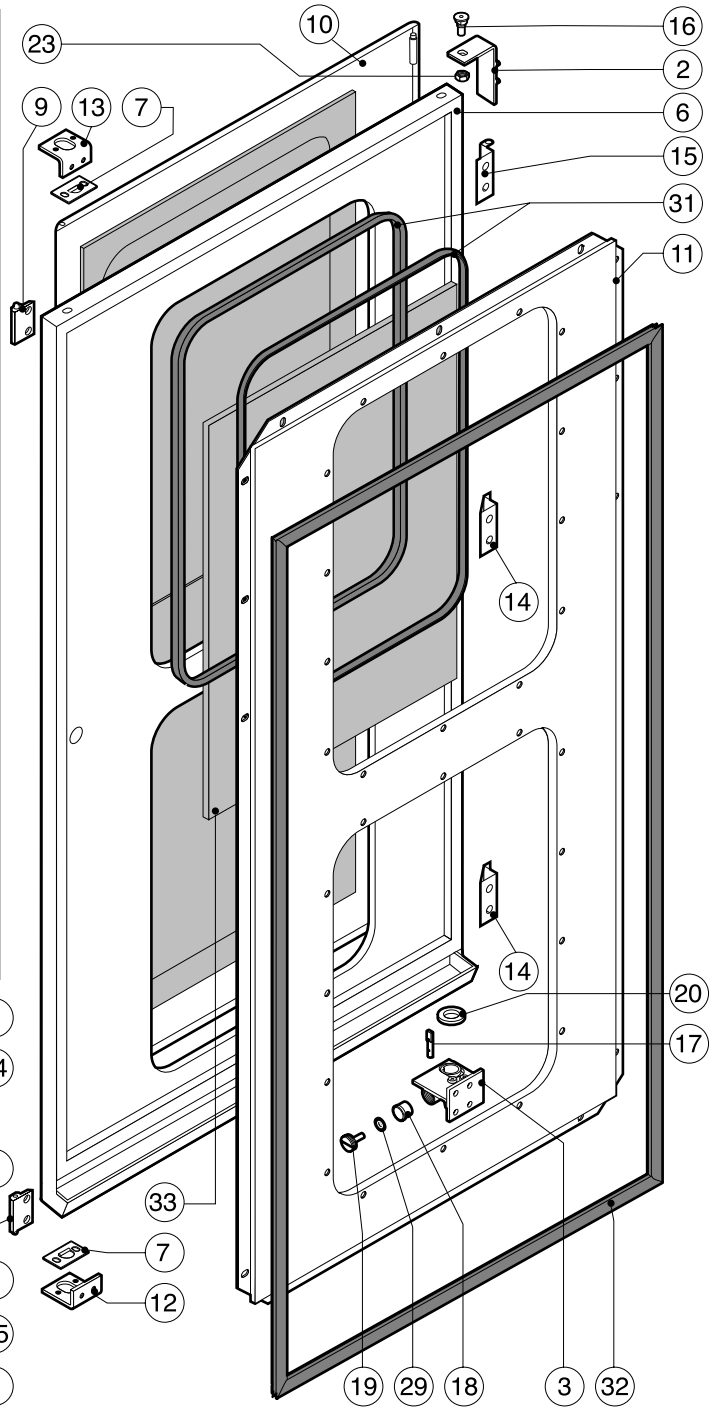

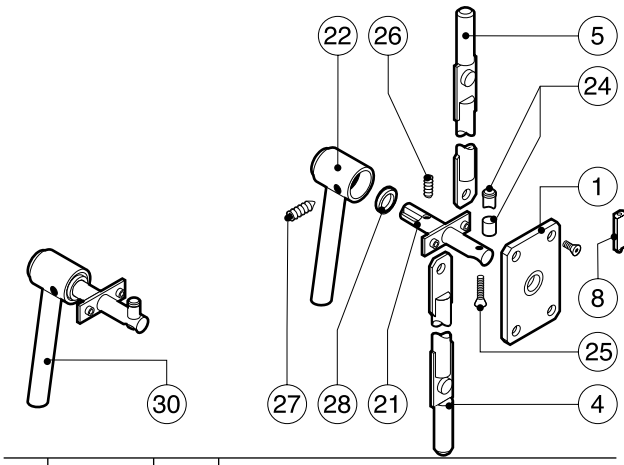

POS.	CODE	PIECES	DESCRIPTION
1	R03200970	1	DOOR LOCK REAR FLANGE
2	R10201290	1	UPPER DOOR HINGE
3	R10201330	1	LOWER DOOR HINGE WITH RETAINER
4	R10202950	1	LOWER DOOR ROD
5	R10202960	1	UPPER DOOR ROD
6	R10207630	1	DOOR
7	R10207680	2	DOOR ROD ADJUSTABLE PLATE
8	R10208290	1	FRONT LOWER DOOR PANEL CATCH
9	R10208300	1	FRONT UPPER DOOR PANEL CATCH
10	R10208340	1	FRONT DOOR PANEL
11	R10410770	1	INNER DOOR PANEL
12	R10411350	1	LOWER SQUARE FOR DOOR ROD
13	R10411360	1	UPPER SQUARE FOR DOOR ROD
14	R10456040	2	LOWER HINGE FOR FRONT DOOR PANEL
15	R10456050	1	UPPER HINGE FOR FRONT DOOR PANEL
16	R58002150	1	HINGE PIN
17	R58002540	1	DOOR PIVOT SUNK KEY
18	R58002550	1	DOOR RETAINER GUIDE SHOE
19	R58002560	1	SCREW FOR LOWER DOOR HINGE

POS.	CODE	PIECES	DESCRIPTION
20	R58002570	1	WASHER Ø 30/15x3
21	R58003180	1	DOOR HANDLE PIN
22	R58003450	1	DOOR HANDLE
23	R58004050	1	NUT FOR UPPER DOOR HINGE
24	R58004781	1	DOOR HANDLE HOOK
25	R61040272	1	DOOR HANDLE HOOK SCREW
26	R61090052	1	GRUB SCREW M6x16
27	R61100262	1	GRUB SCREW M8x20
28	R61420021	1	ELASTIC WASHER
29	R61620091	16	BELLEVILLE WASHER Ø 14/6.4
30	R69015050	1	DOOR HANDLE ASSEMBLY
31	R70040200	4	GLASS GASKET
32	R70042040	1	DOOR GASKET
33	R71030120	2	DOOR GLASS

016 40 004 2928 100997 DONADINI & C

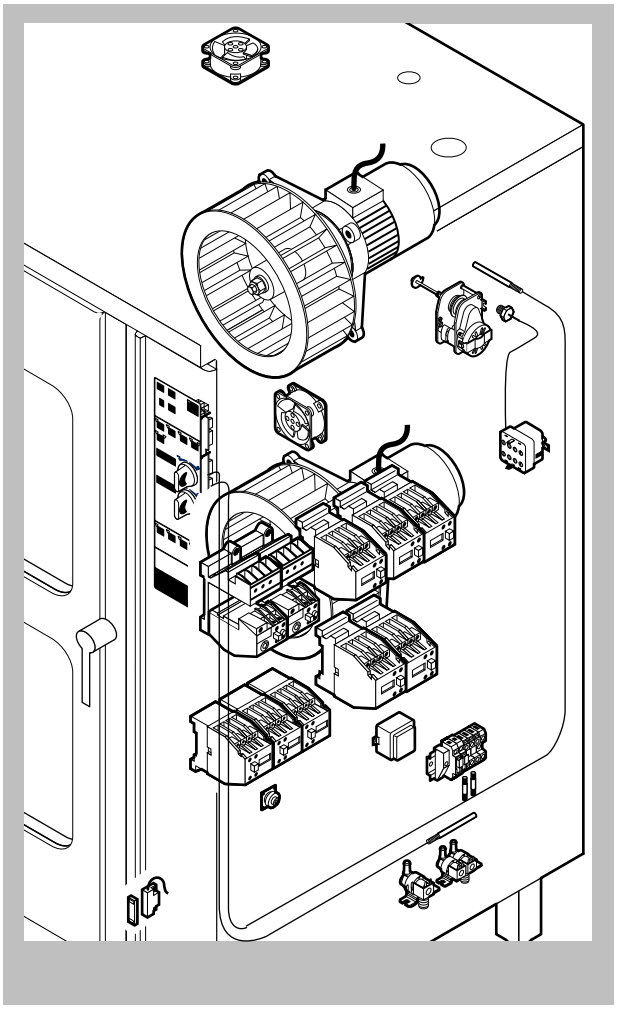

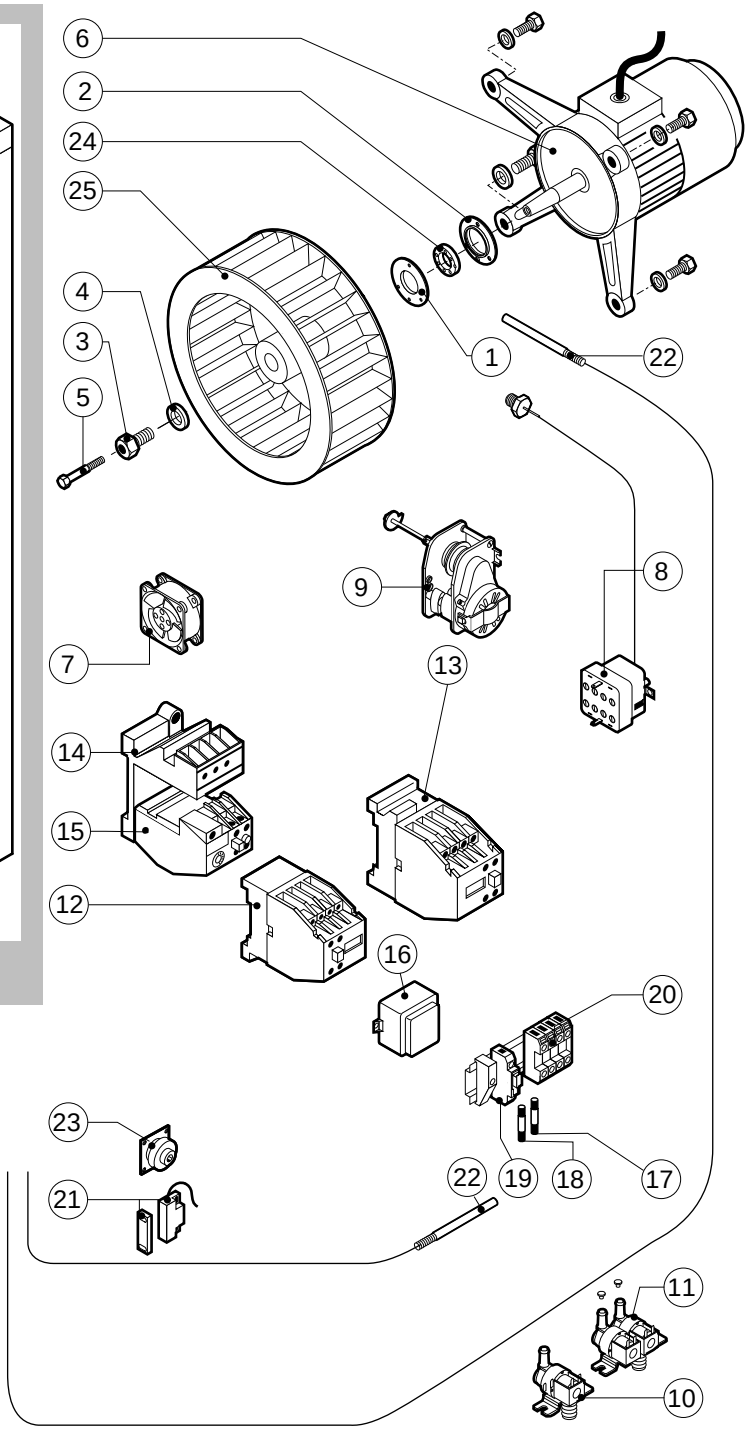

POS.	CODE	PIECES	DESCRIPTION
1	R58003840	2	MOTOR GASKET BRASS FLANGE
2	R58003850	2	MOTOR GASKET BRASS COUNTER FLANGE
3	R58004000	2	FAN SCREW M12x1.5 SX
4	R58004010	2	FAN WASHER Ø 30/12.5
5	R61020562	2	FAN SCREW TE A2 M6x55
6	R65040061	2	MOTOR HP 1 KIT
7	R65060010	2	COMPONENTS VENTILATION MOTOR Ø 80
8	R65070070	1	CHAMBER SAFETY THERMOSTAT
9	R65095000	1	DAMPER SYSTEM
10	R65110010	1	SOLENOID VALVE 220V 50HZ
11	R65115060	1	SOLENOID VALVE 220V 50HZ WITH 2 FLOW REDUCER
12	R65140150	3	CONTACTOR 3TF4011-OAUO 240V
13	R65140240	5	CONTACTOR 3TF4211-OAUO 240V
14	R65160050	2	THERMIC SWITCH SUPPORT 3UX1418
15	R65160120	2	THERMIC PROTECTION 3UA5000-1C 1.6-2.5A
16	R65180650	1	TRANSFORMER 23VA
17	R65200200	1	FUSE 2A
18	R65200320	1	FUSE 0.2A (T)
19	R65210020	2	FUSE CARRIER

POS.	CODE	PIECES	DESCRIPTION
20	R65220130	1	TERMINAL BOARD
21	R65265100	1	DOOR SWITCH
22	R65325000	2	PROBE PT100
23	R65330040	1	BUZZER
24	R70020050	2	MOTOR GASKET
25	R75400290	2	FAN Ø 300x120/20 50HZ P.D. KIT

016 40 004 2929 300797 DONADINI & C

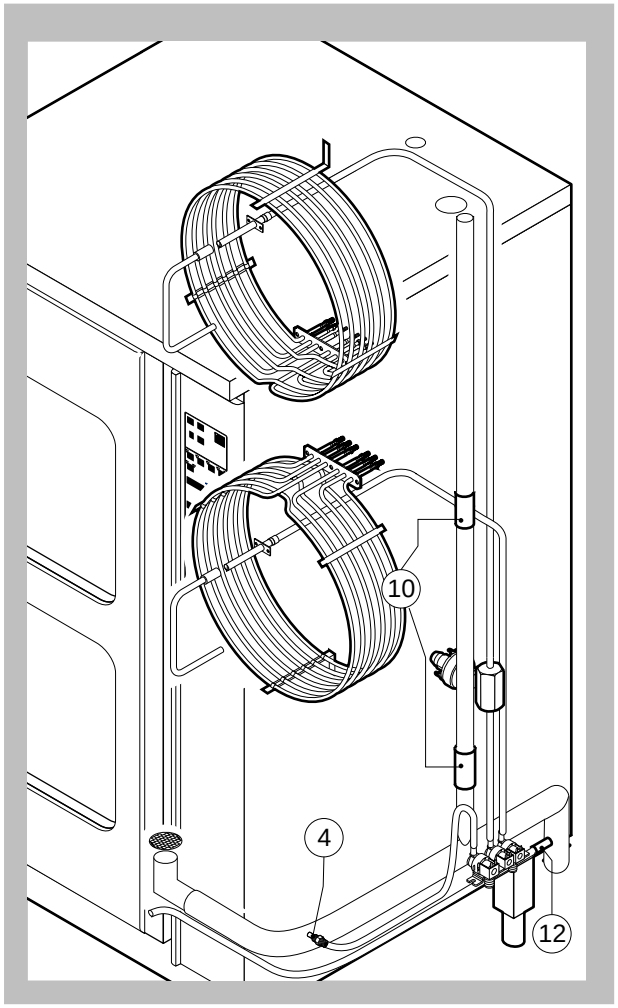

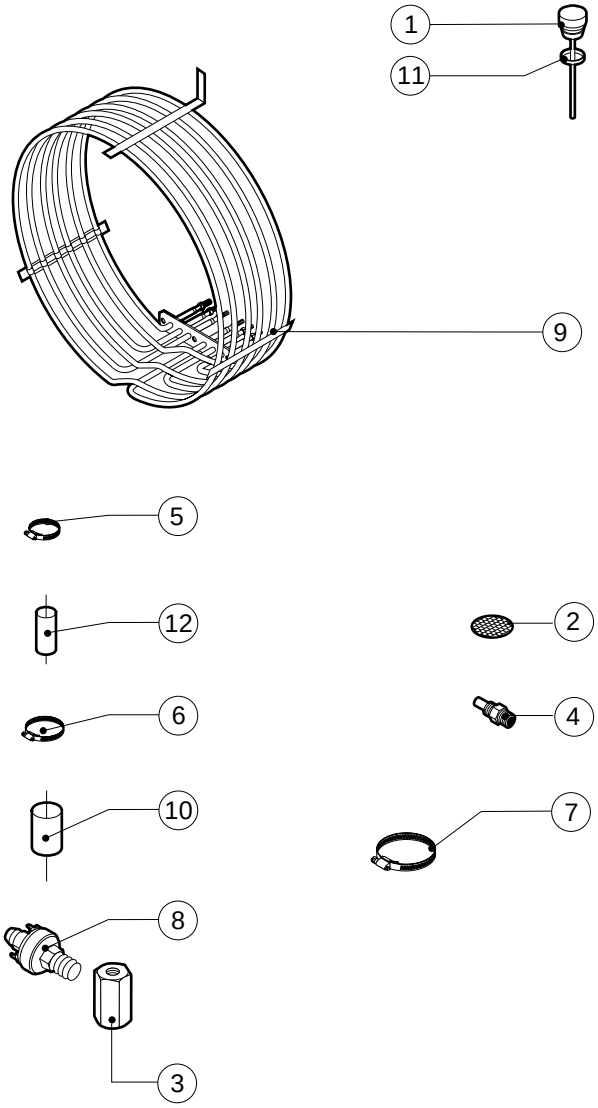

POS.	CODE	PIECES	DESCRIPTION
1	R10100140	1	DAMPER SYSTEM CAP
2	R10201710	1	DRAIN FILTER
3	R58003390	1	PRESSURE SWITCH BRASS PIPE FITTING
4	R58006080	1	STEAM QUENCHING NOZZLE Ø 2
5	R61630011	8	METAL CLAMPS 12-22/9
6	R61630021	2	METAL CLAMPS 30-45/9
7	R61630041	4	METAL CLAMPS 70-90/9
8	R63070050	1	WATER SAFETY PRESSURE SWITCH 1/8" 0.5-0.35 BAR
9	R65011310	2	CHAMBER HEATING ELEMENT 15000W
10	R70060010	2	SILICON COUPLING Ø 30
11	R70060020	1	DAMPER SYSTEM CAP GASKET
12	R70060060	1	SILICON COUPLING Ø 15

POS.	CODE	PIECES	DESCRIPTION

016 40 004 2930 100997 DONADINI & C

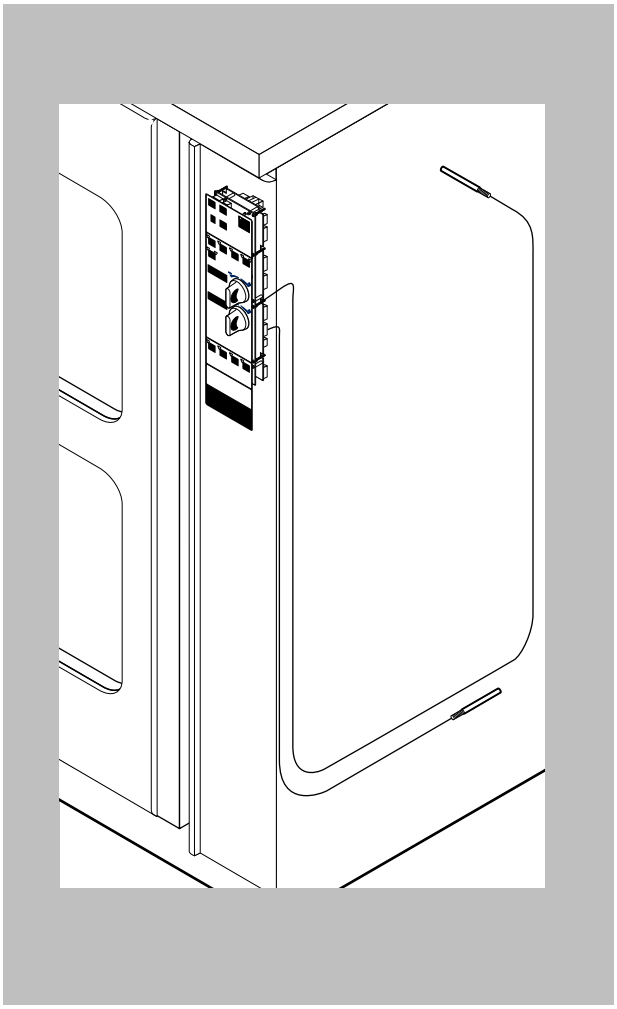

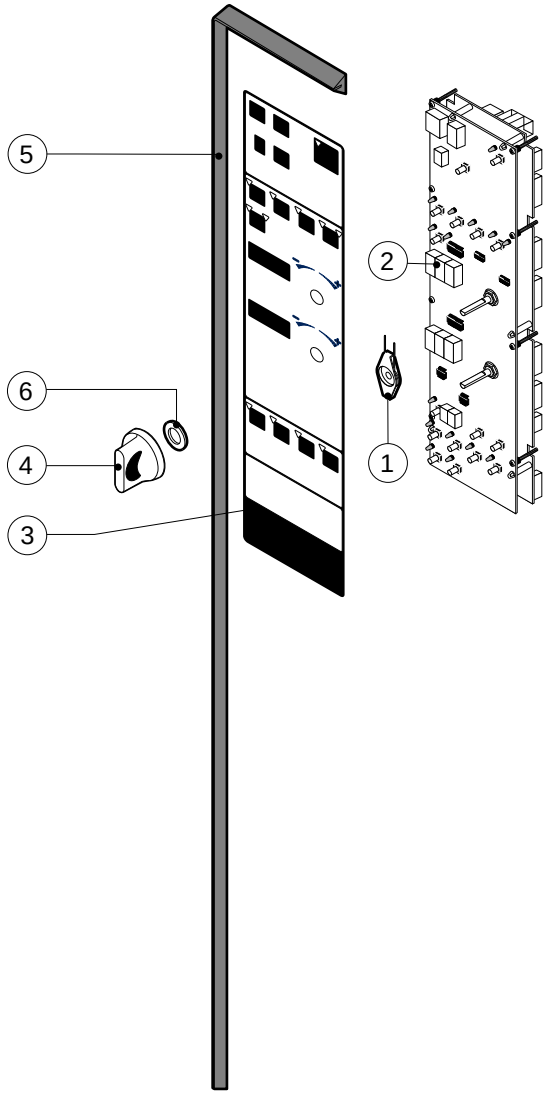

POS.	CODE	PIECES	DESCRIPTION
1	R10205120	2	KNOB SPRING
2	R65300800	1	CONTROL PANEL P.C. BOARD
3	R67010930	1	LAINOX PLATE
4	R69030150	2	KNOB KIT
5	R70040850	1	CONTROL PANEL GASKET
6	R70050020	4	KNOB GASKET

POS.	CODE	PIECES	DESCRIPTION