016.40.149 0011 271200 DONADINI & C

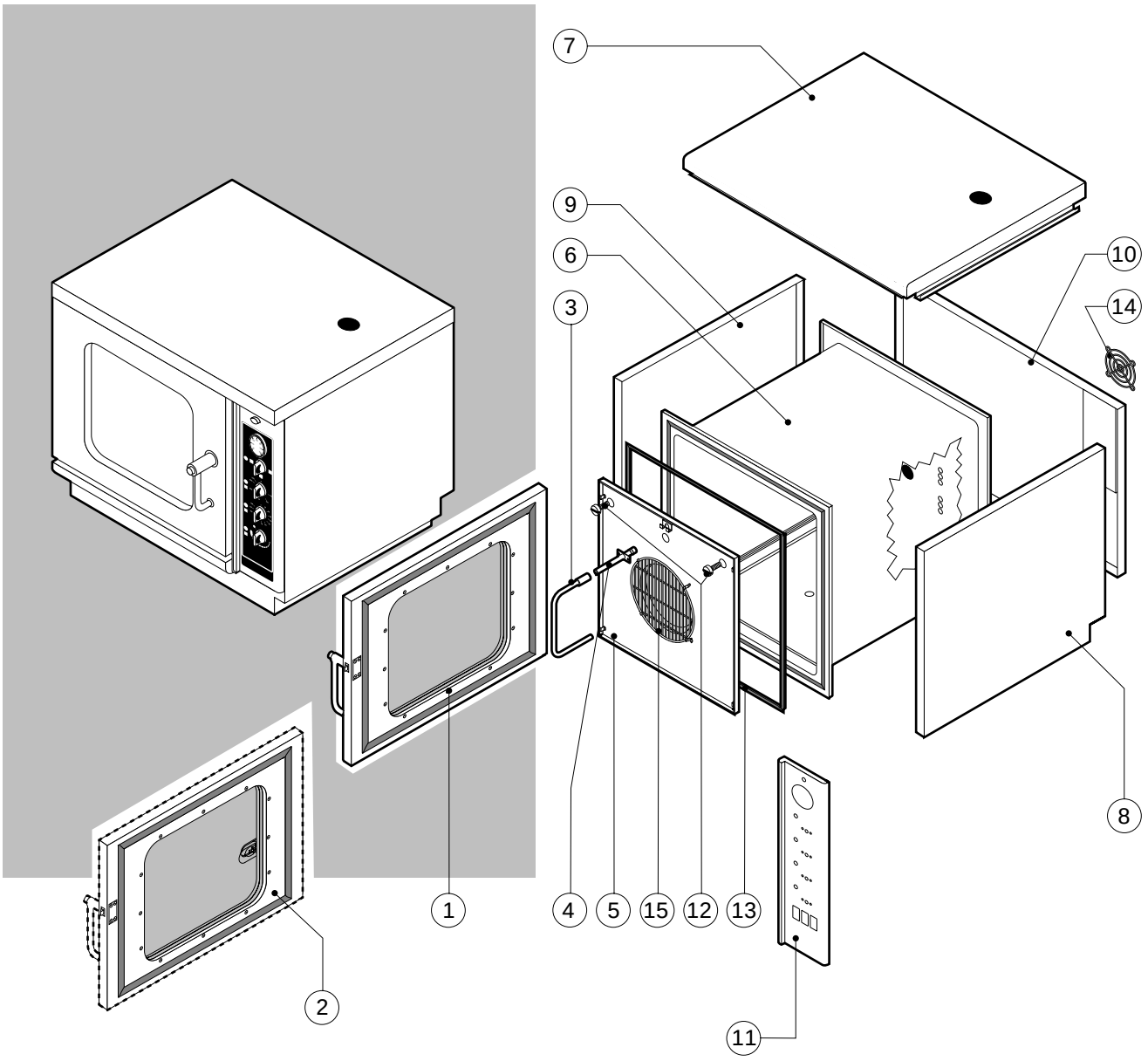

POS.	CODE	PIECES	DESCRIPTION
1	R10105900	1	DOOR ASSEMBLY
2	R10105910	1	DOOR ASSEMBLY WITH LIGHTS
3	R10206470	1	SPRITZER EXTENSION
4	R10206540	1	SPRITZER UNION
5	R10207251	1	FAN GUARD PANEL ASSEMBLY
6	R10207451	1	COOKING CABINET ASSEMBLY
7	R10212040	1	COVER PANEL
8	R10212320	1	RIGHT SIDE PANEL
9	R10212330	1	LEFT SIDE PANEL
10	R10212340	1	REAR PANEL
11	R10212480	1	CONTROL PANEL
12	R58003100	2	FAN GUARD FASTENING SCREW
13	R70043250	1	FRONT GASKET
14	R75300020	1	FAN GUARD GRID Ø 120
15	R75300030	1	FAN GUARD GRID Ø 190

POS.	CODE	PIECES	DESCRIPTION

EDIZIONE 0999

CE 106 M

tav. A

016.40.149 0012 271200 DONADINI & C

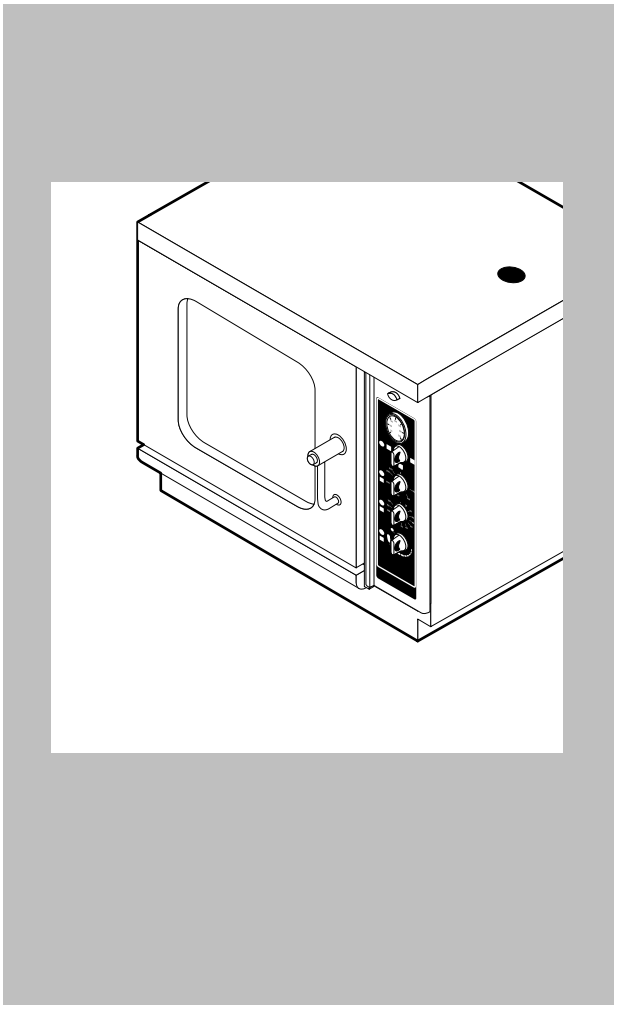

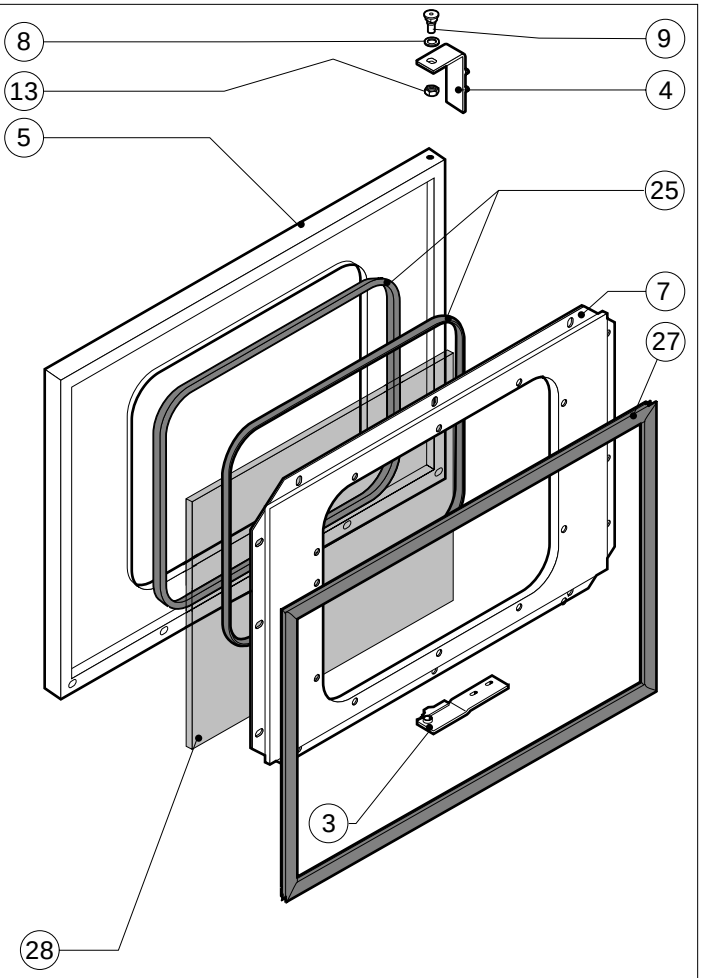

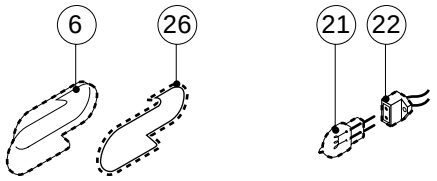

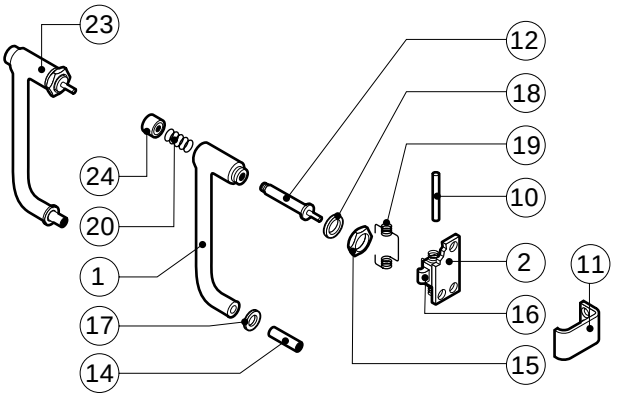

POS.	CODE	PIECES	DESCRIPTION
1	R09200230	1	DOOR HANDLE
2	R10100110	1	PRONG FLANGE
3	R10201190	1	LOWER DOOR HINGE
4	R10201290	1	UPPER DOOR HINGE
5	R10212220	1	DOOR
6	R10400150	1	LIGHT PROTECTION
7	R10401320	1	INNER DOOR PANEL
8	R10401710	1	WASHER FOR UPPER DOOR HINGE
9	R58002150	1	HINGE PIN
10	R58002160	1	DOOR HANDLE PRONG PIN
11	R58002760	1	DOOR HANDLE PRONG COUPLER
12	R58003240	1	DOOR HANDLE BUTTON ROD
13	R58004050	1	NUT FOR UPPER DOOR HINGE
14	R58004270	1	DOOR HANDLE SPACER
15	R58004830	1	RING NUT M18x1
16	R58005050	1	DOOR HANDLE PRONG
17	R58005340	1	DOOR HANDLE LOWER INSULATION WASHER
18	R58005350	1	DOOR HANDLE UPPER INSULATION WASHER
19	R61620012	1	DOOR HANDLE CATCH SPRING

POS.	CODE	PIECES	DESCRIPTION
20	R61620041	1	DOOR HANDLE BUTTON SPRING
21	R65270020	1	LIGHT 20W 12V G4
22	R65270400	1	LIGHT SOCKET
23	R69015000	1	DOOR HANDLE ASSEMBLY
24	R69031190	1	DOOR HANDLE PUSH BUTTON
25	R70040080	2	GLASS GASKET
26	R70040800	1	LIGHT PROTECTION GASKET
27	R70042010	1	DOOR GASKET
28	R71030060	1	DOOR GLASS

016.40.149 0013 271200 DONADINI & C

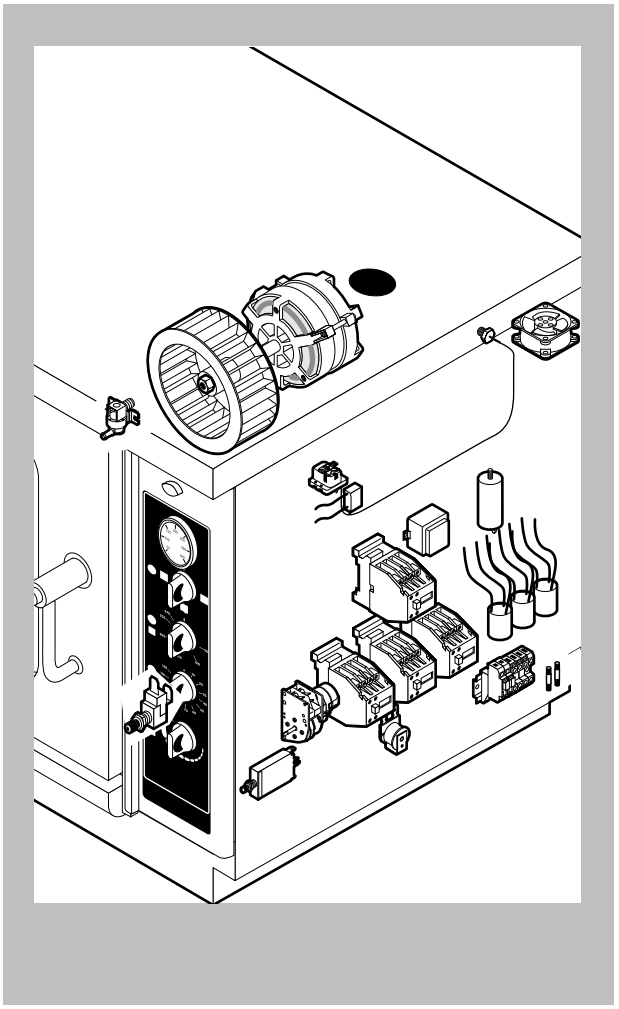

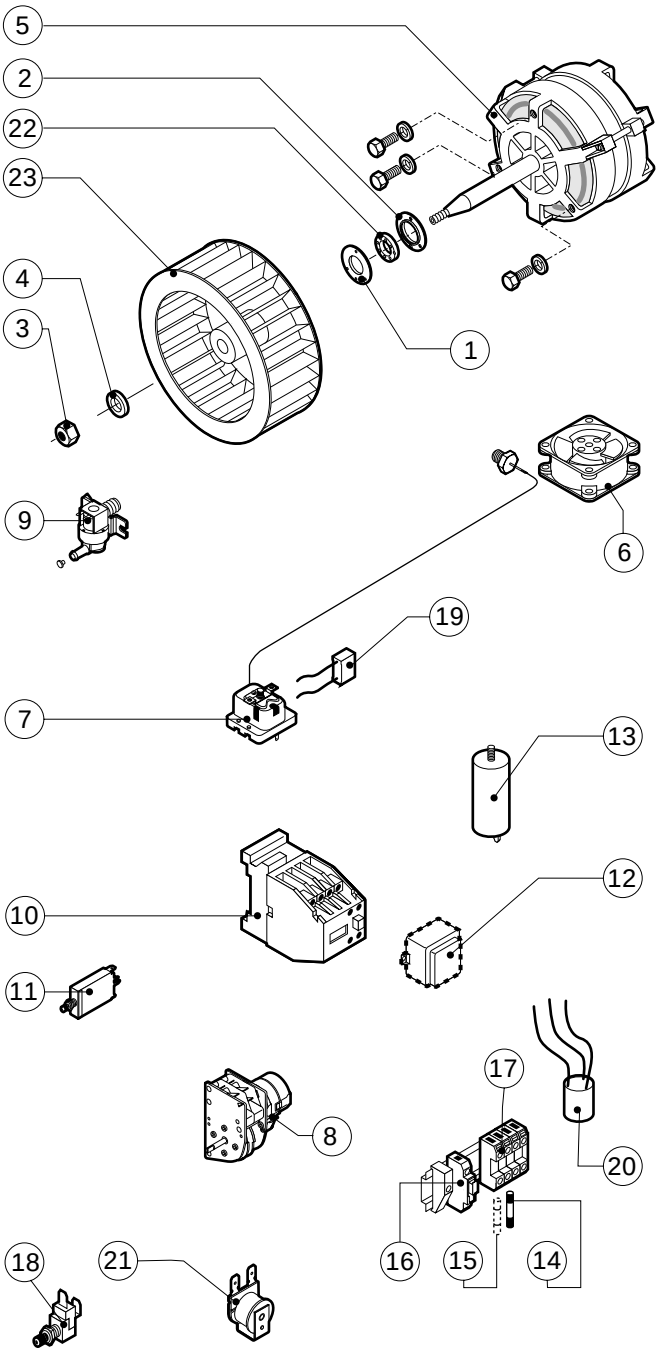

POS.	CODE	PIECES	DESCRIPTION
1	R58003860	1	MOTOR GASKET BRASS FLANGE
2	R58003870	1	MOTOR GASKET BRASS COUNTER FLANGE
3	R58004020	1	FAN SECURITY NUT M10 SX
4	R61400052	1	FAN WASHER Ø 21/10.5
5	R65040420	1	MOTOR KW 0.37 KIT
6	R65060050	1	COMPONENTS VENTILATION MOTOR Ø 120
7	R65070070	1	CHAMBER SAFETY THERMOSTAT
8	R65090190	1	REVERSING SWITCH 8'
9	R65115120	1	SOLENOID VALVE 220V 50HZ WITH FLOW REDUCER
10	R65140150	4	CONTACTOR 3TF4011-OAUO 240V
11	R65160310	1	THERMIC PROTECTION T12-211S-2.5A
12	R65180420	1	TRANSFORMER 20VA
13	R65190180	1	CAPACITOR 10 µF
14	R65200200	1	FUSE 2A
15	R65200320	1	FUSE 0.2A (T)
16	R65210020	2	FUSE CARRIER
17	R65220090	1	TERMINAL BOARD
18	R65260540	1	DOOR SWITCH
19	R65280130	1	INTERFERENCE SUPPRESSOR

POS.	CODE	PIECES	DESCRIPTION
20	R65280200	3	INTERFERENCE SUPPRESSOR
21	R65330010	1	BUZZER
22	R70020040	1	MOTOR GASKET
23	R75400400	1	FAN Ø 220x78/12 50HZ P.D. KIT

016.40.149 0014 271200 DONADINI & C

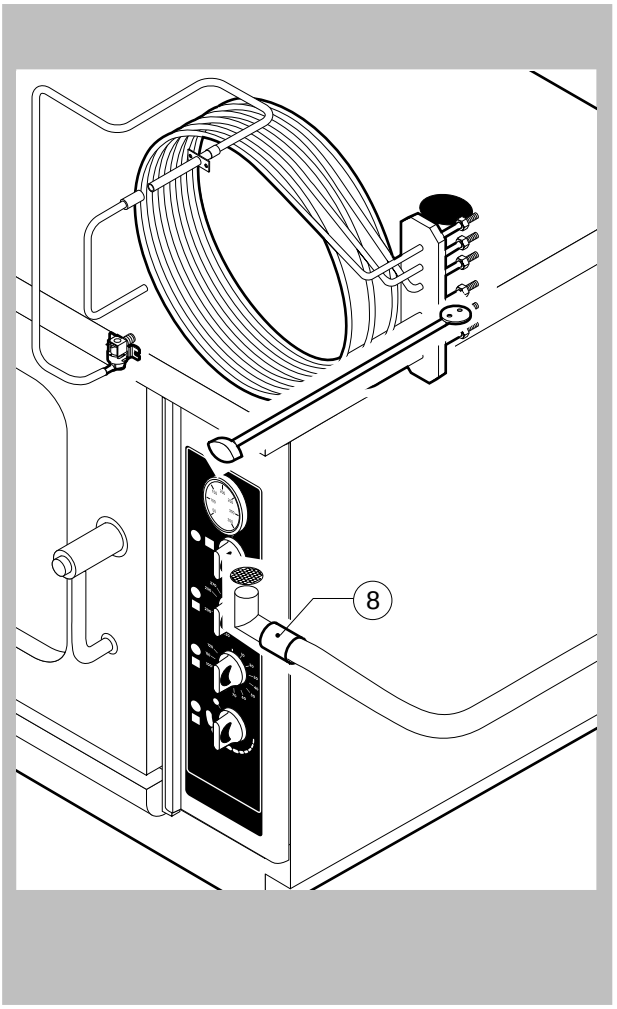

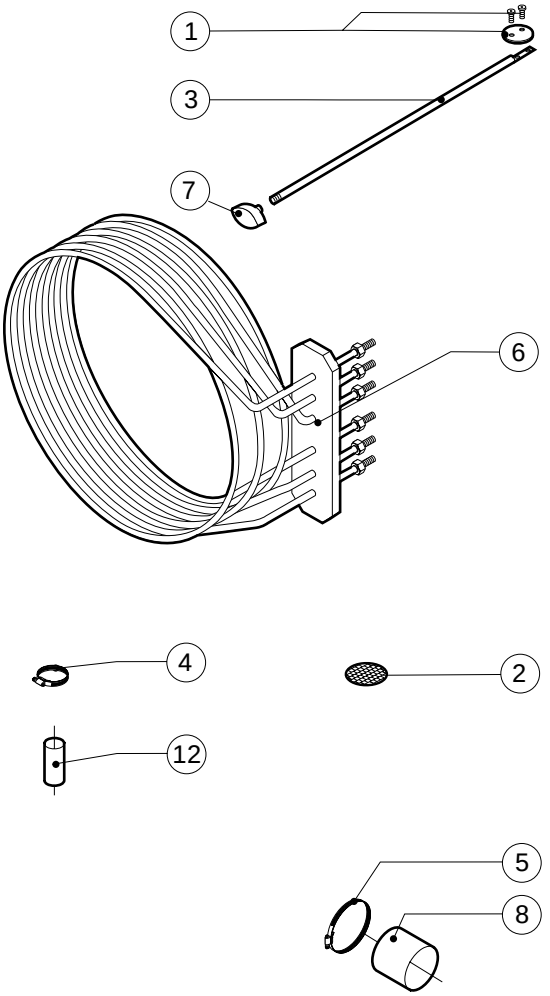

POS.	CODE	PIECES	DESCRIPTION
1	R04403460	1	CHAMBER VENT PLATE Ø 46
2	R10201700	1	DRAIN FILTER
3	R58003460	1	CHAMBER VENT ROD
4	R61630011	2	METAL CLAMPS 12-22/9
5	R61630031	2	METAL CLAMPS 40-60/9
6	R65011540	1	CHAMBER HEATING ELEMENT 7500W
7	R69010410	1	STEAM OUTLET KNOB
8	R70060040	1	SILICON COUPLING Ø 50

POS.	CODE	PIECES	DESCRIPTION

016.40.149 0015 271200 DONADINI & C

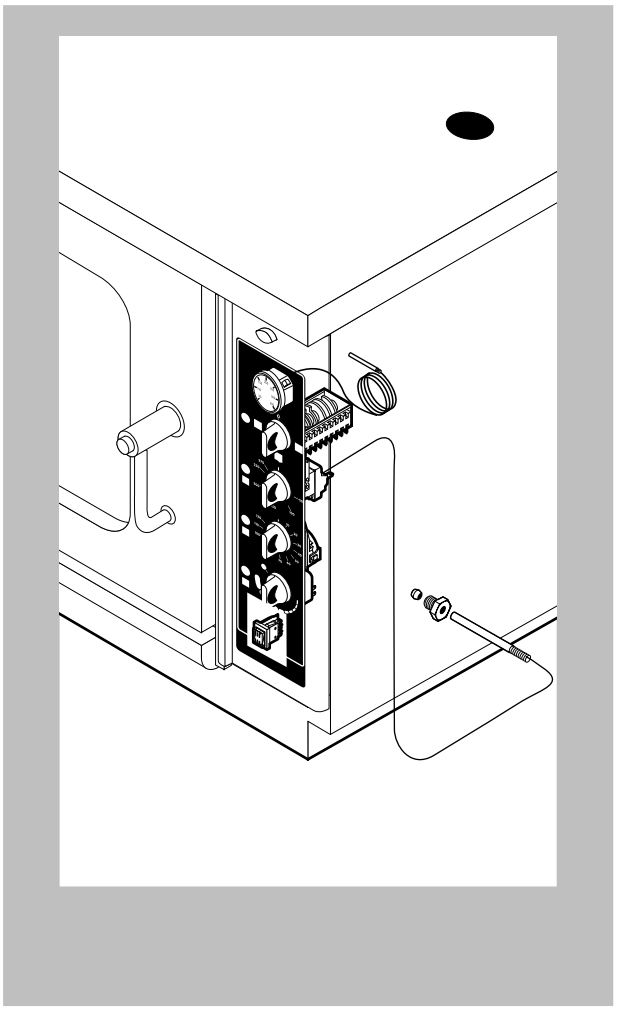

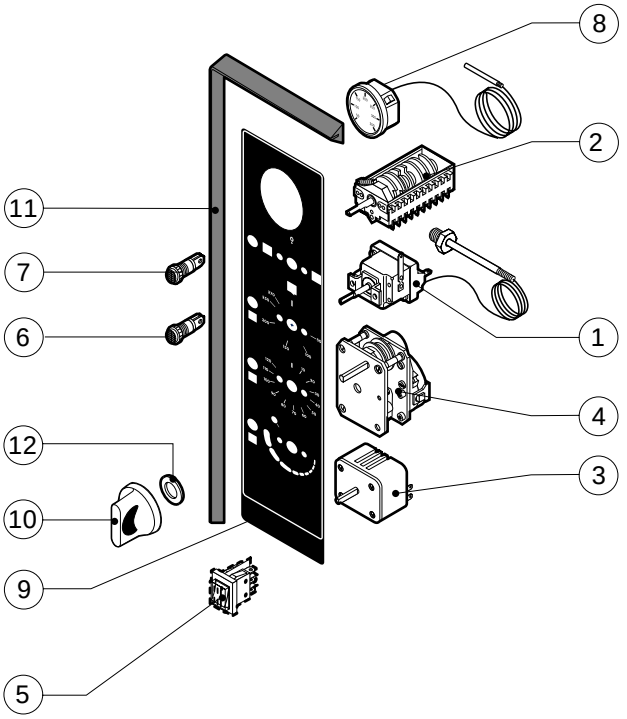

POS.	CODE	PIECES	DESCRIPTION
1	R65070210	1	CABINET THERMOSTAT 50/270°C
2	R65080010	1	MAIN SELECTOR SWITCH
3	R65080250	1	ENERGY REGULATOR
4	R65090020	1	TIMER
5	R65260120	1	SWITCH
6	R65270220	3	ORANGE INDICATING LIGHT
7	R65270230	1	GREEN INDICATING LIGHT
8	R65340050	1	THERMOMETER
9	R67012200	1	LAINOX PLATE
10	R69030150	4	KNOB KIT
11	R70040830	1	CONTROL PANEL GASKET
12	R70050020	8	KNOB GASKET

POS.	CODE	PIECES	DESCRIPTION