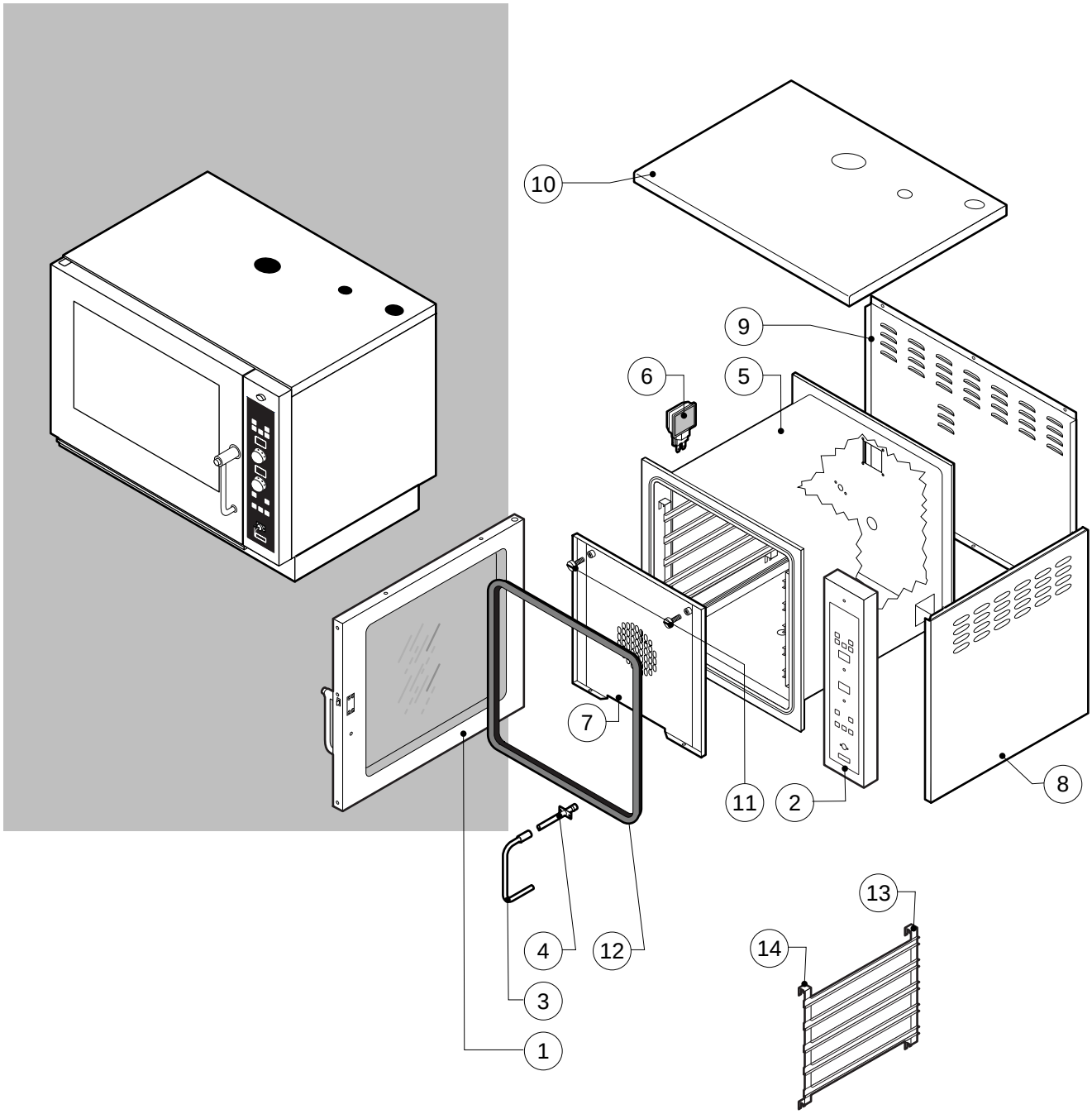

POS.	CODE	PIECES	DESCRIPTION
1	R18100120	1	DOOR ASSEMBLY
2	R18201120	1	CONTROL PANEL
3	R18200540	1	SPRITZER EXTENSION
4	R18201430	1	SPRITZER UNION
5	R18211200	1	COOKING CABINET ASSEMBLY
6	R65270510	1	LAMP COVER
7	R18402100	1	FAN GUARD PANEL ASSEMBLY
8	R18401760	2	SIDE PANEL
9	R18401770	1	REAR PANEL
10	R18419380	1	COVER PANEL
11	R58006400	2	FAN GUARD FASTENING SCREW
12	R70044350	1	FRONT GASKET
13	R17200420	2	REMOVABLE RACK
14	R17200330	2	REMOVABLE RACK

POS.	CODE	PIECES	DESCRIPTION

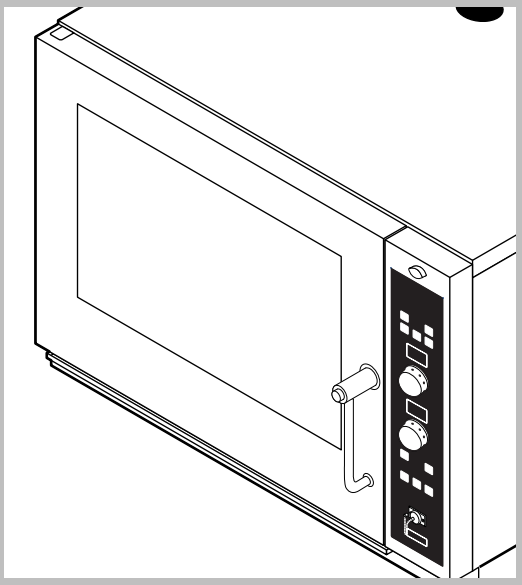

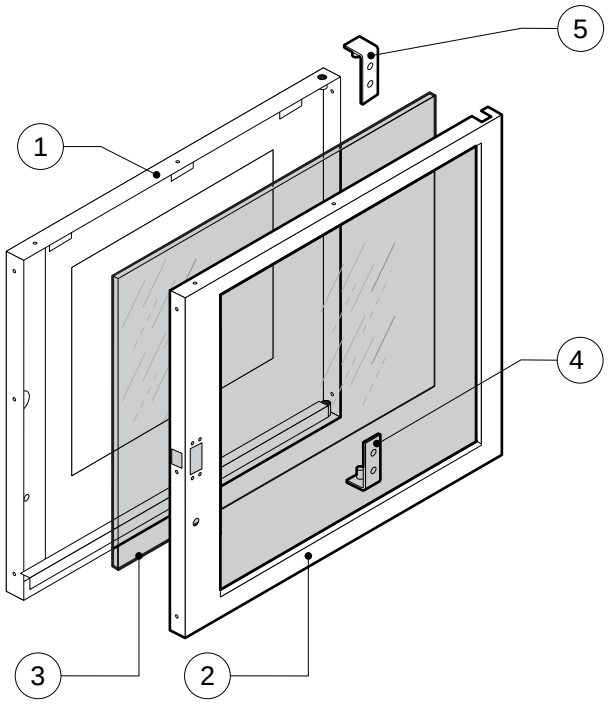

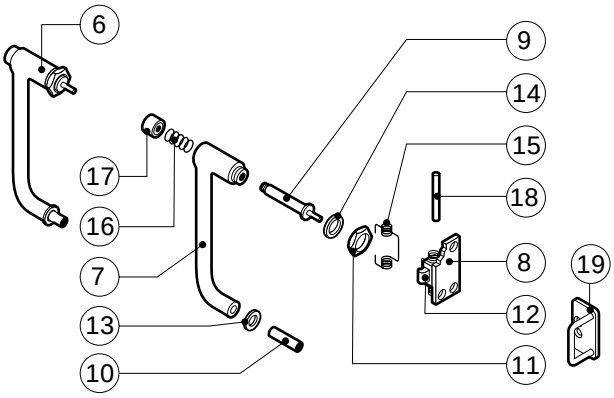

POS.	CODE	PIECES	DESCRIPTION
1	R18200960	1	DOOR
2	R18402370	1	INNER DOOR PANEL
3	R71201340	1	FRONTAL DOOR GLASS
4	R18201260	1	LOWER DOOR HINGE
5	R18201270	1	UPPER DOOR HINGE
6	R69015000	1	DOOR HANDLE ASSEMBLY
7	R09200230	1	DOOR HANDLE
8	R10100110	1	PRONG FLANGE
9	R58003240	1	DOOR HANDLE BUTTON ROD
10	R58004270	1	DOOR HANDLE SPACER
11	R58004830	1	RING NUT M18x1
12	R58005050	1	DOOR HANDLE PRONG
13	R58005340	1	DOOR HANDLE LOWER INSULATION WASHER
14	R58005350	1	DOOR HANDLE UPPER INSULATION WASHER
15	R61620012	1	DOOR HANDLE CATCH SPRING
16	R61620041	1	DOOR HANDLE BUTTON SPRING
17	R69031190	1	DOOR HANDLE PUSH BUTTON
18	R58002160	1	DOOR HANDLE PRONG PIN
19	R18200940	1	DOOR HANDLE PRONG COUPLER

POS.	CODE	PIECES	DESCRIPTION

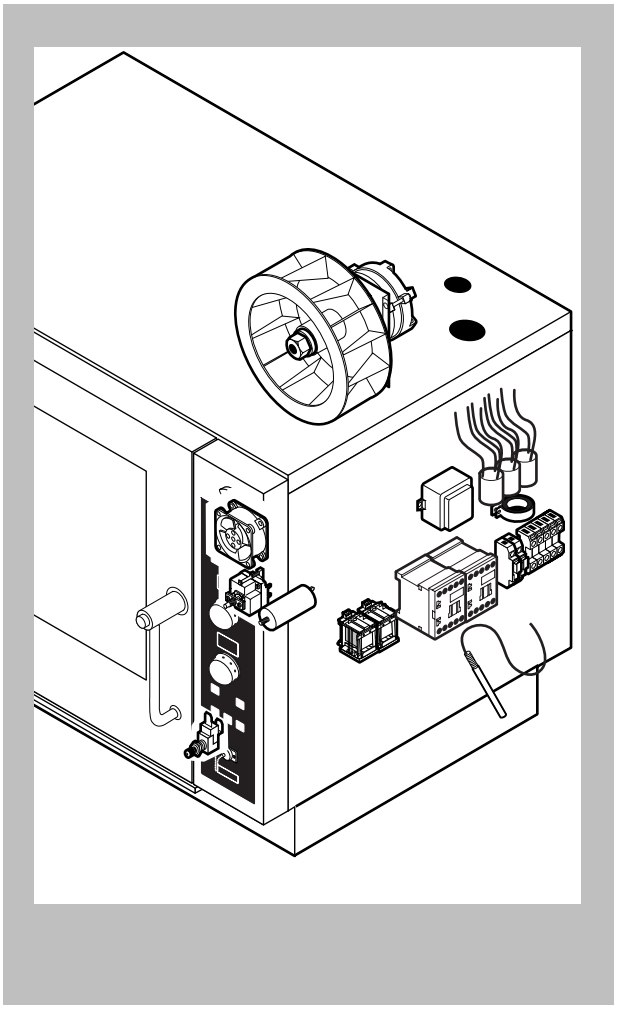

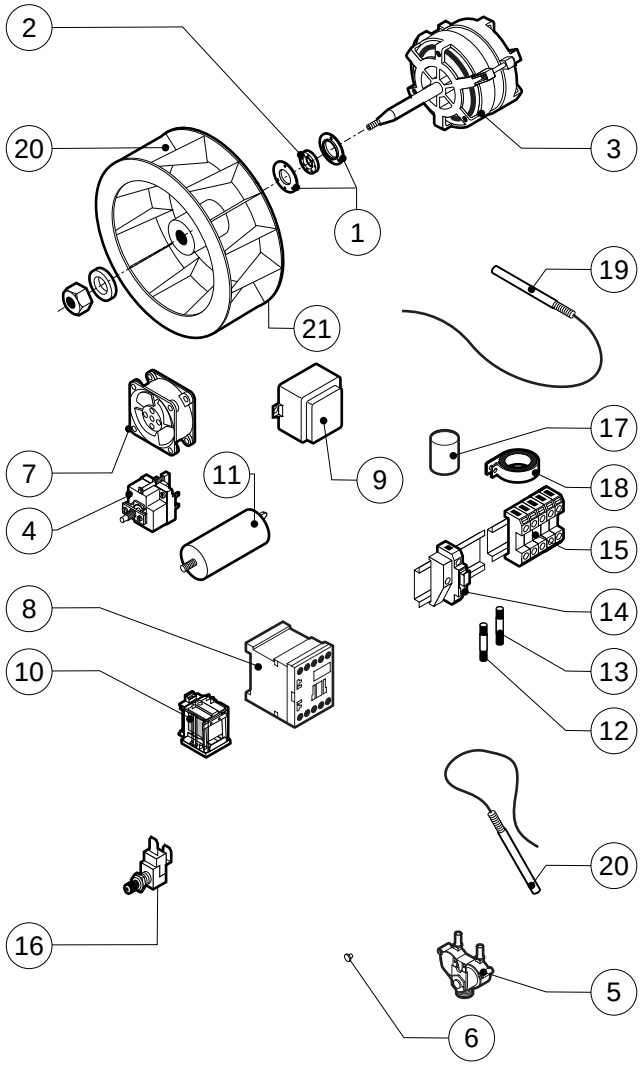

POS.	CODE	PIECES	DESCRIPTION
1	R58005500	1	MOTOR GASKET BRASS FLANGE
2	R70020020	1	MOTOR GASKET
3	*R65041000	1	MOTOR 200W
4	R65070350	1	CHAMBER SAFETY THERMOSTAT
5	R65110230	1	SOLENOID VALVE 220V 50HZ WITH FLOW REDUCER
6	R65110500	1	10 LT/H WATER FLOW REDUCER
7	R65060010	1	COMPONENTS VENTILATION MOTOR Ø 80
8	*R65140700	2	CONTACTOR DIL M9-01 4KW-20A
9	R65180420	1	TRANSFORMER 20VA
10	R65170100	2	RELAY 240V AC 16A 62.82300308
11	*R65190180	1	CAPACITOR 10 µF
12	R65200200	1	FUSE 2A
13	R65200086	1	FUSE 0.125A (T)
14	R65210020	2	FUSE CARRIER
15	R65220090	1	TERMINAL BOARD
16	R65260540	1	DOOR SWITCH
17	*R65280200	3	INTERFERENCE SUPPRESSOR
18	*R65280490	1	FERRITE
19	R65325000	2	PROBE PT100

POS.	CODE	PIECES	DESCRIPTION
20	*R75400410	1	FAN Ø 180x77/12 50HZ P.D.
21	R75400430	1	FAN Ø 180x77/8 60HZ P.D.

*COMPONENT SUBMITTED TO CHANGEMENTS CAUSED BY TENSION DIFFERENT FROM THE STANDARD (3N AC400V 50HZ)

EDIZIONE 0908

BPE 044-054 P tav. C

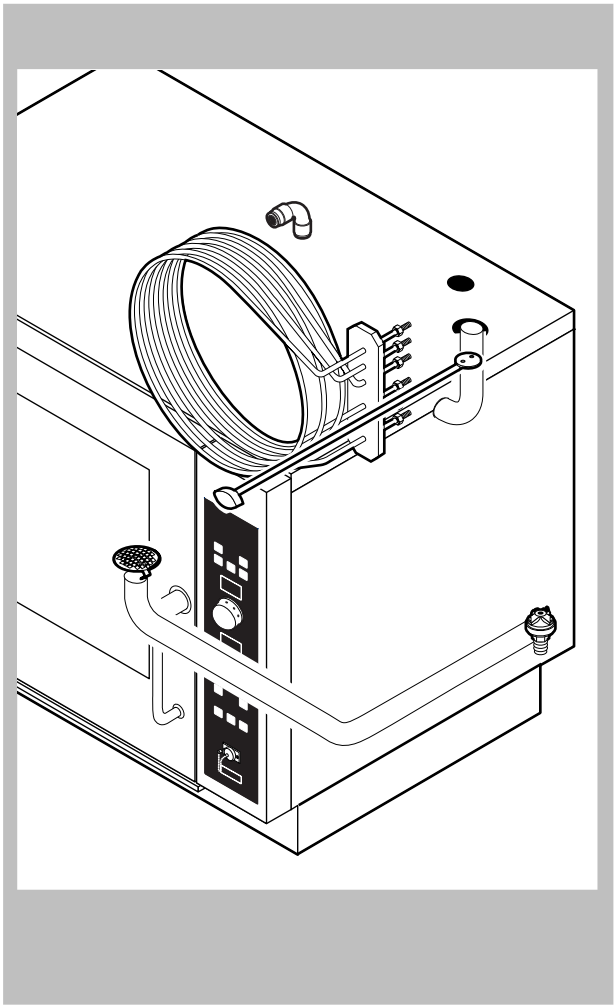

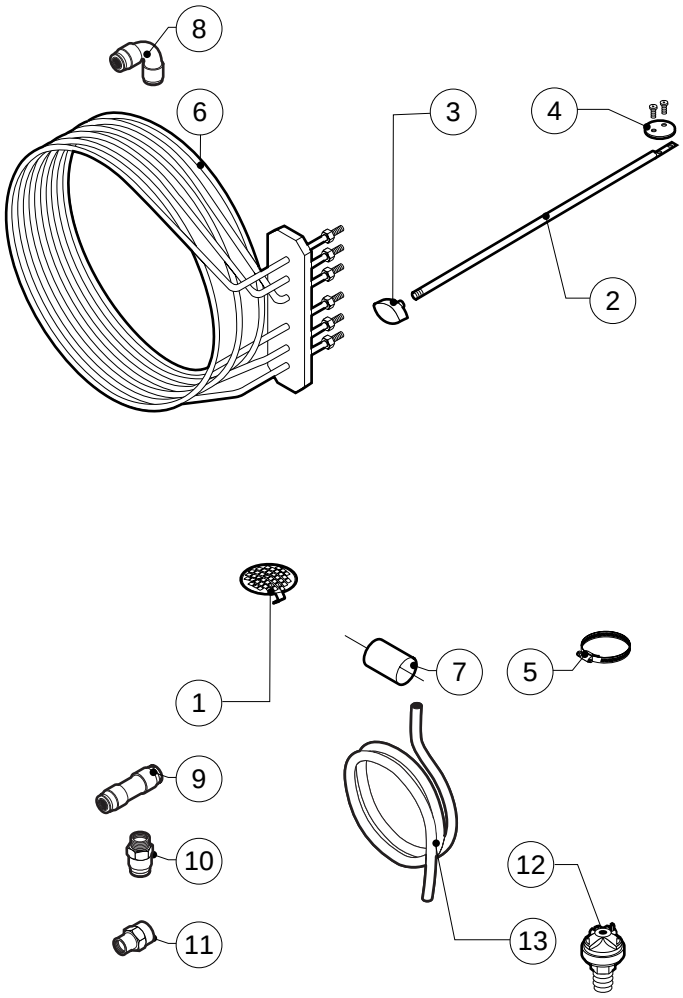

POS.	CODE	PIECES	DESCRIPTION
1	R09201820	1	DRAIN FILTER
2	R58006884	1	CHAMBER VENT ROD
3	R69010410	1	STEAM OUTLET KNOB
4	R18400940	1	CHAMBER VENT PLATE
5	R61630081	2	METAL CLAMPS 20-32/9
6	R65011530	1	CHAMBER HEATING ELEMENT 6000W
7	R70060090	1	SILICON COUPLING Ø 25
8	R62090478	3	ELBOW MIDDLING PIPE FITTING D.10
9	R62090458	1	STRAIGHT MIDDLING PIPE FITTING D.10
10	R62090508	1	10X1/4 STRAIGHT THREADED TERMINAL PIPE FITTING
11	R62030118	1	1/8"-1/4" FEMALE REDUCTION COUPLING
12	R63070050	1	WATER SAFETY PRESSURE SWITCH 1/8" 0,5-0,35 BAR
13	R70070070	1	PE D.10 MM X7 WATER FLEXIBLE PIPE (1 MT LONG)

POS.	CODE	PIECES	DESCRIPTION

*COMPONENT SUBMITTED TO CHANGEMENTS CAUSED BY TENSION DIFFERENT FROM THE STANDARD (3N AC400V 50HZ)

EDIZIONE 0908

BPE 044-054 P tav. D

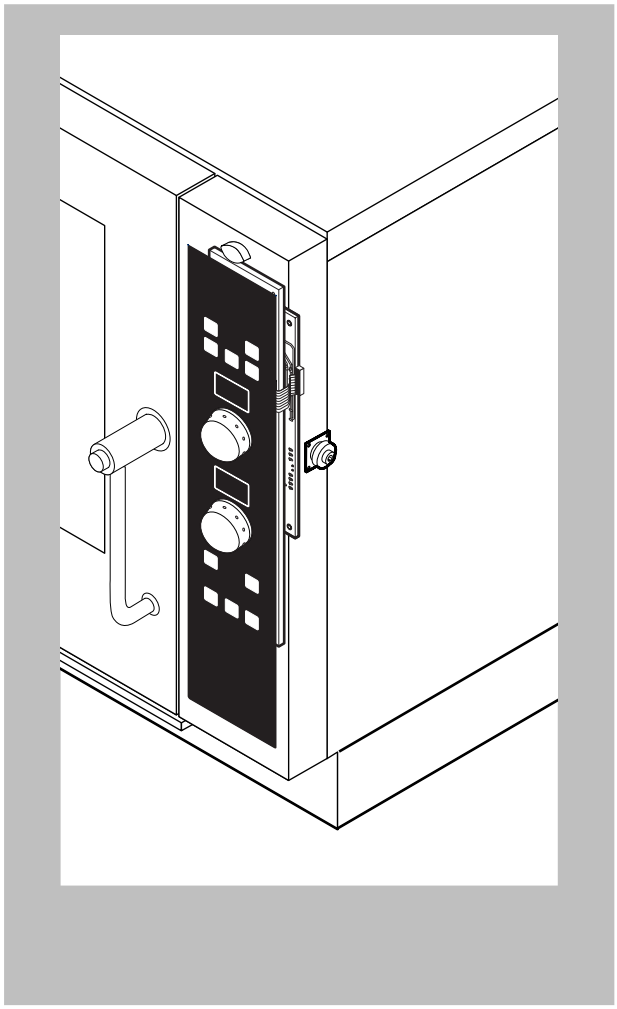

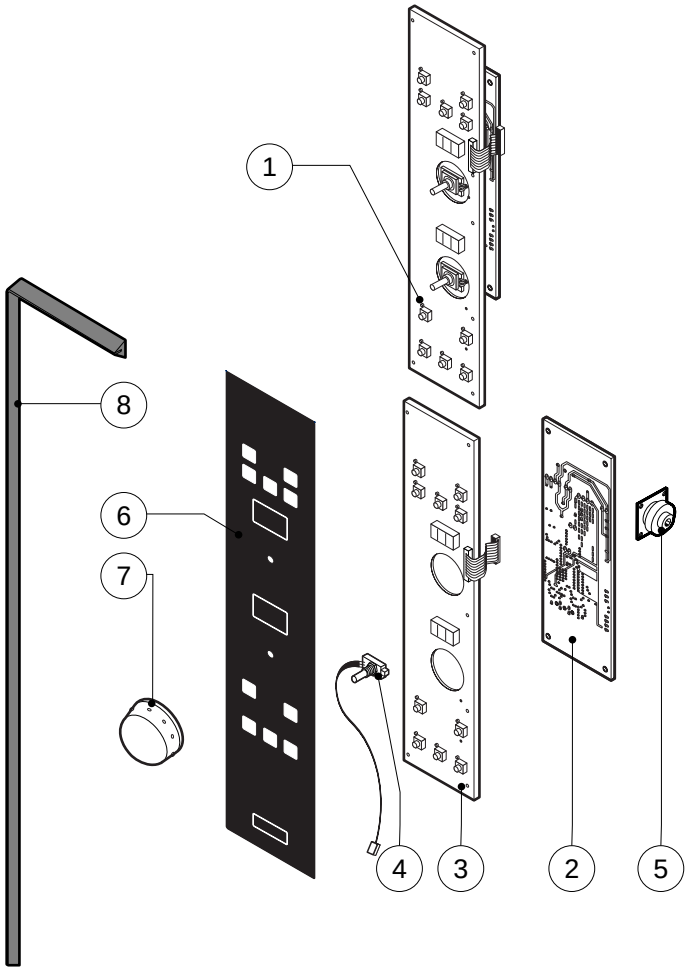

POS.	CODE	PIECES	DESCRIPTION
1	R65301800	1	CONTROL PANEL P.C. BOARD
2	R65301830	1	FRONT PC BOARD "D" MOD
3	R65301820	1	RELAY PC BOARD "D" MOD
4	R65301450	2	FRONT PC BOARD ENCODER
5	R65301440	1	PC BOARD BUZZER
6	R67013580	1	PLATE "P"
7	R69030260	2	KNOB
8	R70044250	1	CONTROL PANEL GASKET

POS.	CODE	PIECES	DESCRIPTION