DEXION

SPARE PARTS CATALOGUE
ERSATZTEILKATALOG
CATALOGUE PIECES DETACHEES
CATALOGO PARTI RICAMBIO
CATALOGO DE PIEZAS DE RECAMBIO
CATALOGO PECAS DE REPOSICAO

LP051
LP053

LP051-10-100
LP053-10-100

31-01-2006

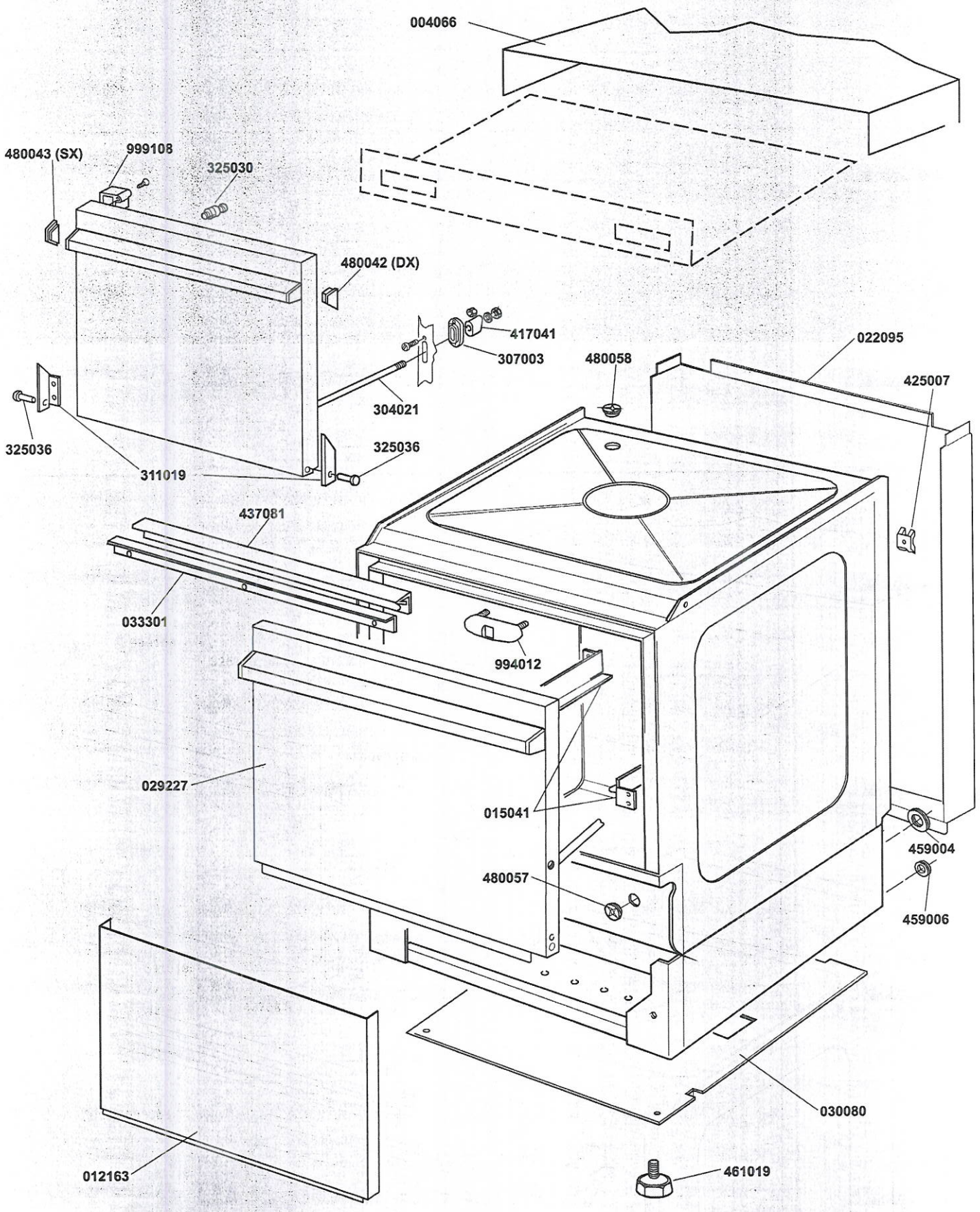
004066
480043 (SX)
999108
325030
480042 (DX)
417041
307003
304021
325036
325036
311019
480058
022095
425007
437081
033301
994012
029227
015041
480057
459004
459006
012163
030080
461019

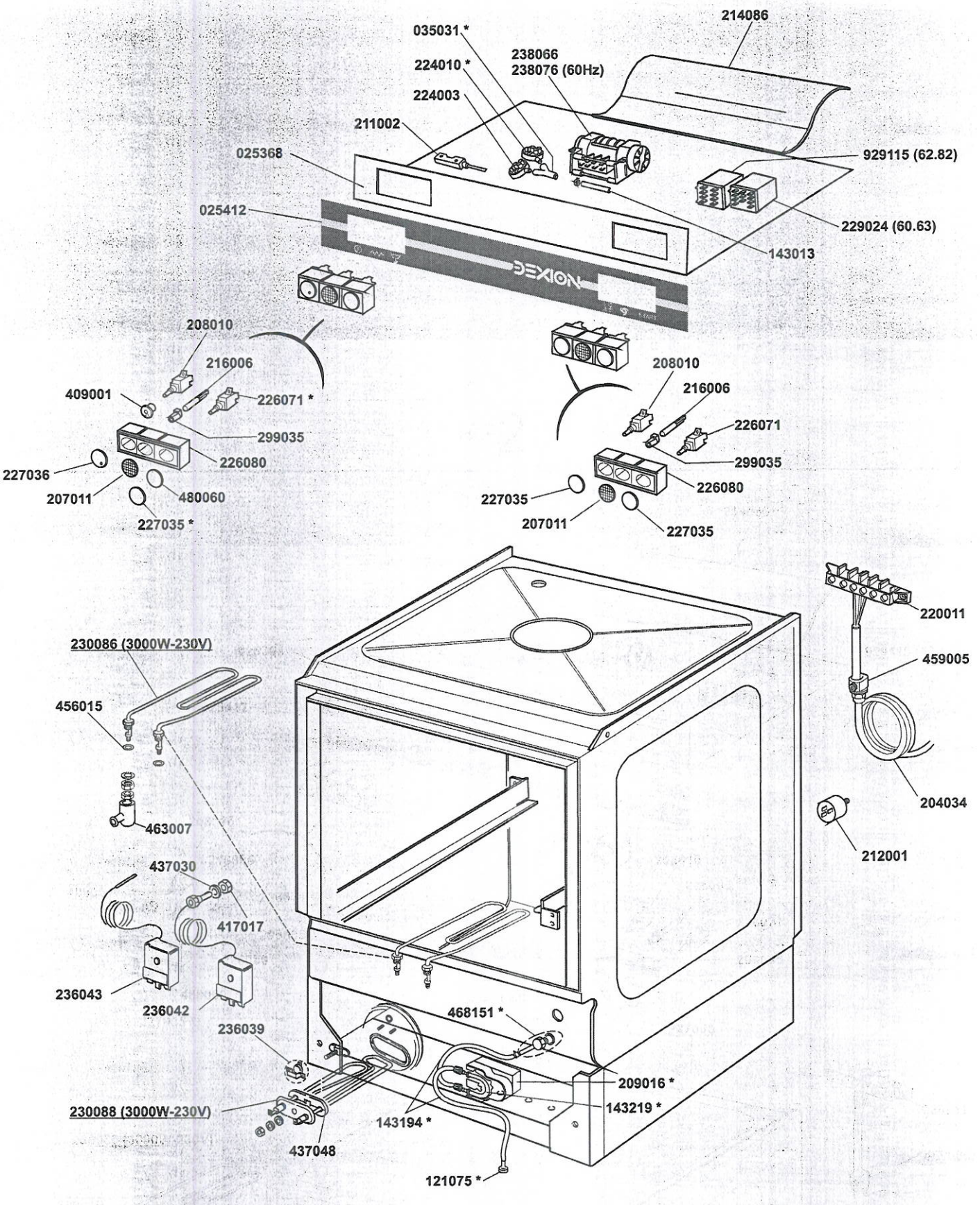
214086
035031 *
238066
238076 (60Hz)
224010 *
224003
211002
025368
929115 (62.82)
025412
229024 (60.63)
143013
208010
216006
409001
226071 *
299035
226080
227036
207011
480060
227035 *
208010
216006
226071
299035
226080
227035
207011
227035
220011
459005
204034
212001
230086 (3000W-230V)
456015
463007
437030
417017
236043
236042
236039
468151 *
209016 *
143219 *
230088 (3000W-230V)
143194 *
437048
121075 *

*Optional

2a

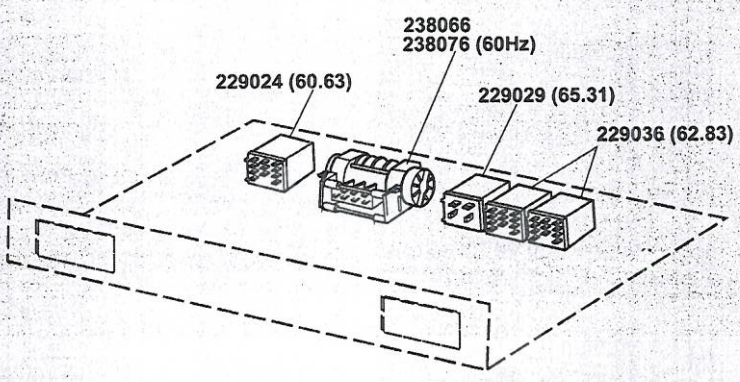
238066
238076 (60Hz)
229024 (60.63)
229029 (65.31)
229036 (62.83)

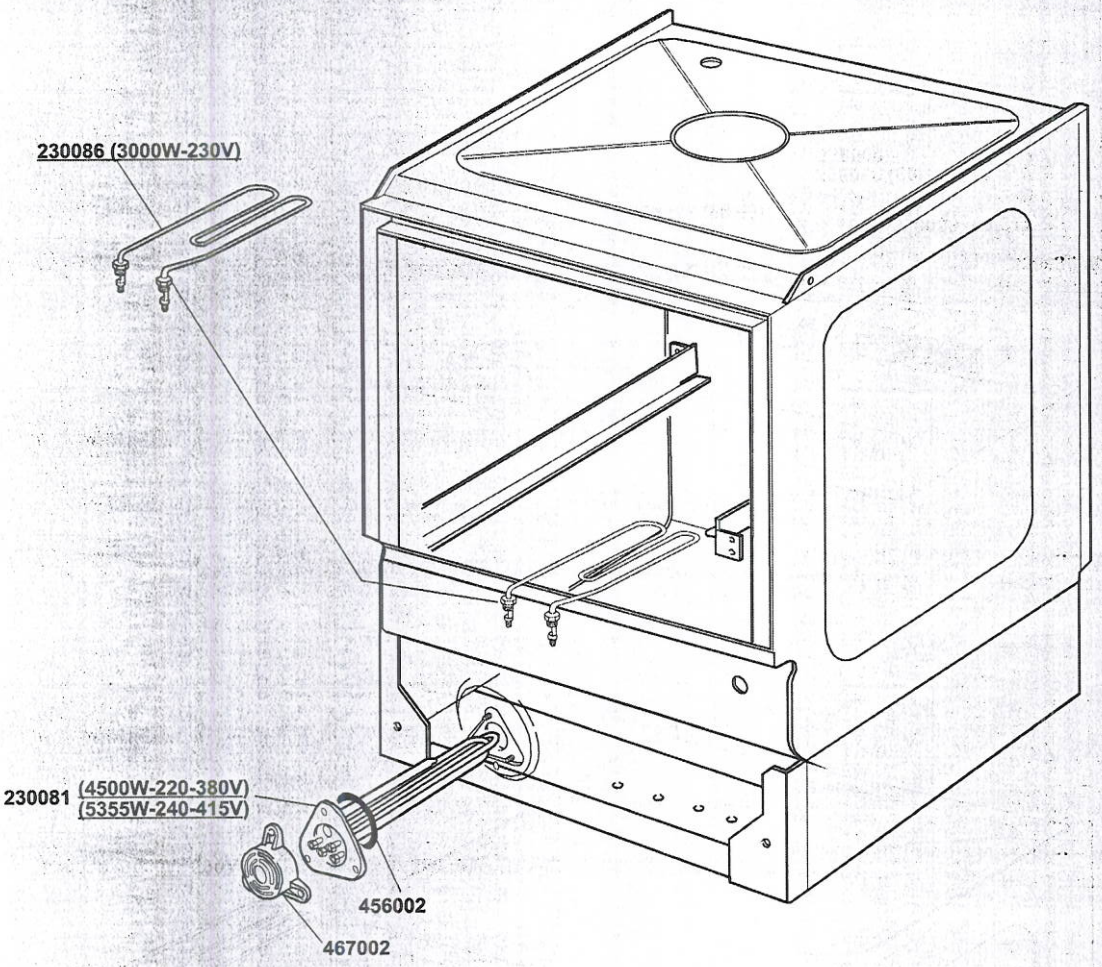
230086 (3000W-230V)
230081 (4500W-220-380V)
(5355W-240-415V)
456002
467002

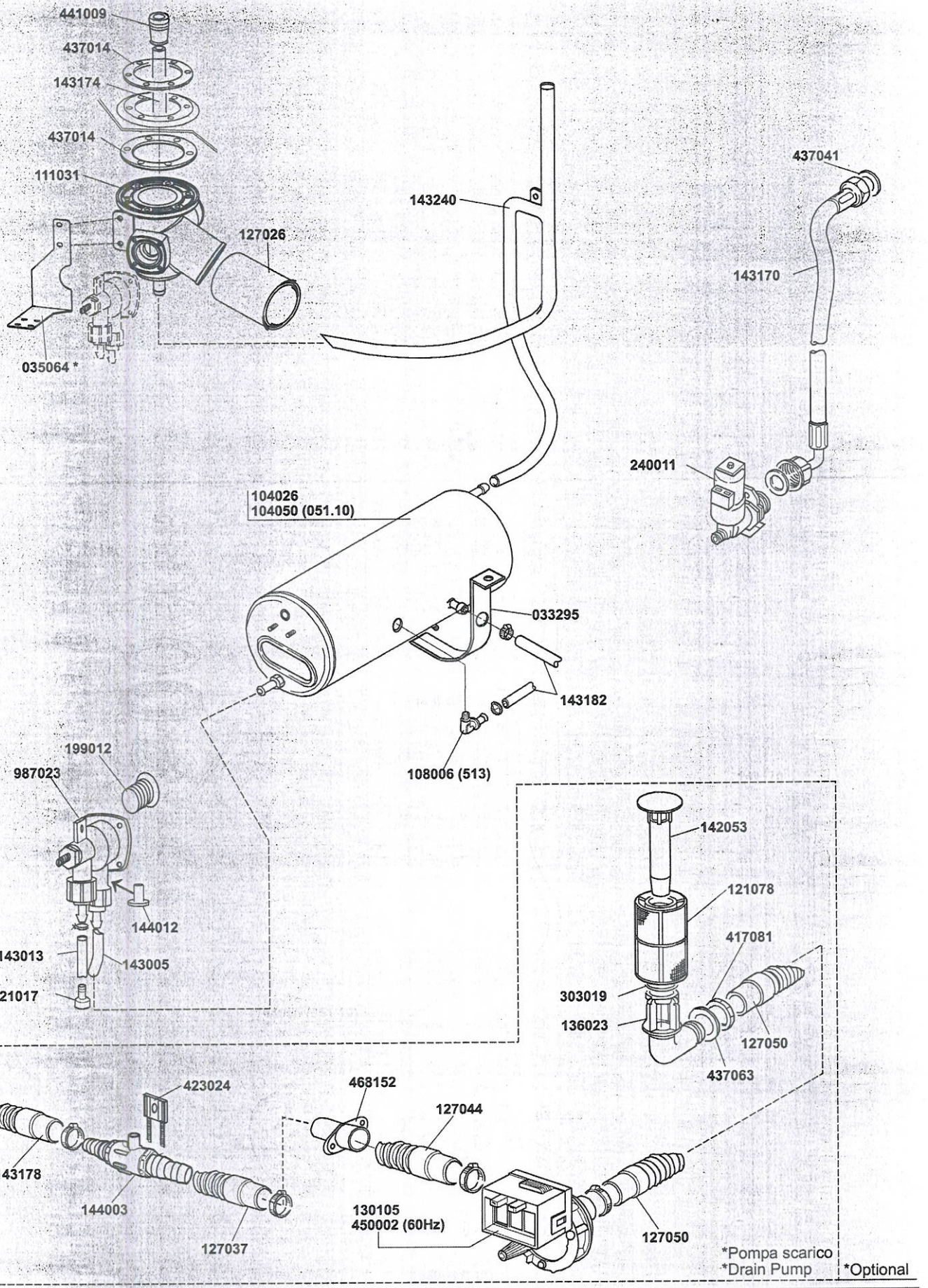
441009
437014
143174
437014
111031
127026
035064 *
143240
437041
143170
240011
104026
104050 (051.10)
033295
143182
108006 (513)
199012
987023
144012
143013
143005
121017
142053
121078
417081
303019
136023
127050
437063
423024
468152
127044
143178
144003
127037
130105
450002 (60Hz)
127050
*Pompa scarico
*Drain Pump
*Optional

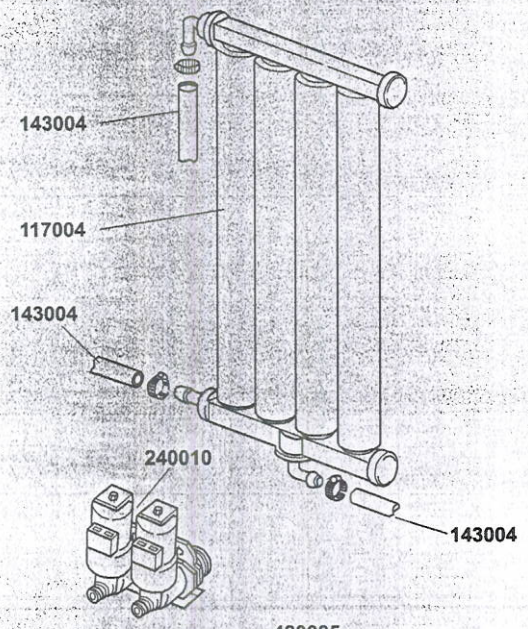
143004
117004
143004
240010
143004

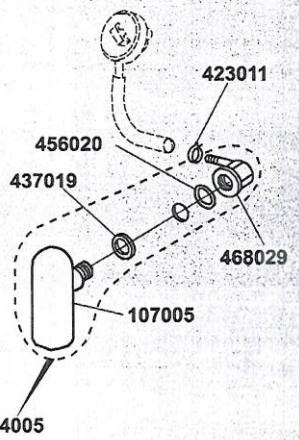
423011
456020
437019
468029
107005
984005

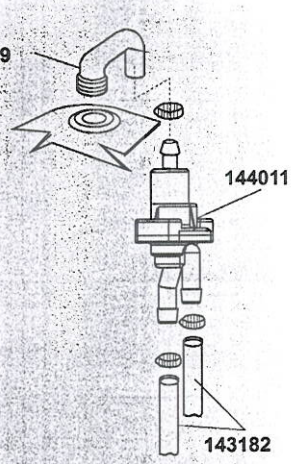
143189
144011
143182

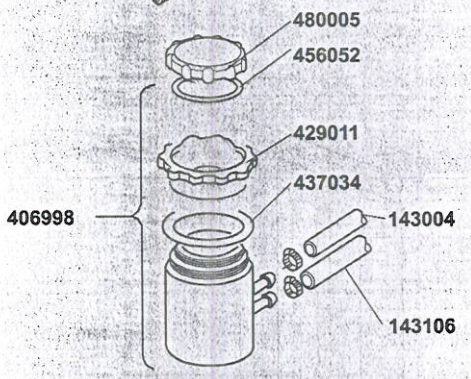
480005
456052
429011
437034
406998
143004
143106

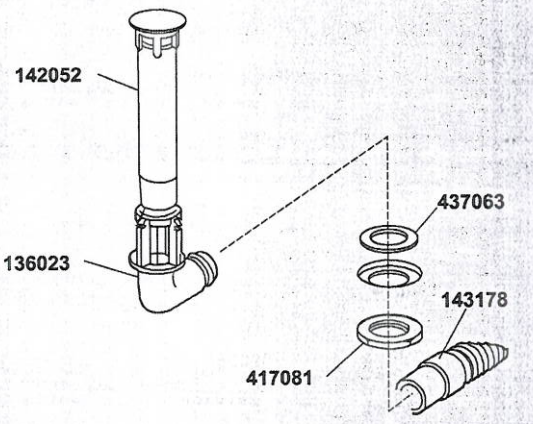
142052
136023
437063
143178
417081

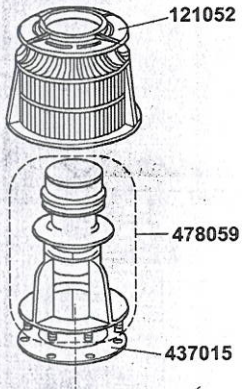
121052
478059
437015

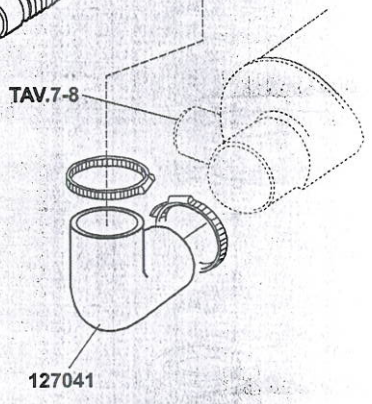
TAV.7-8
127041

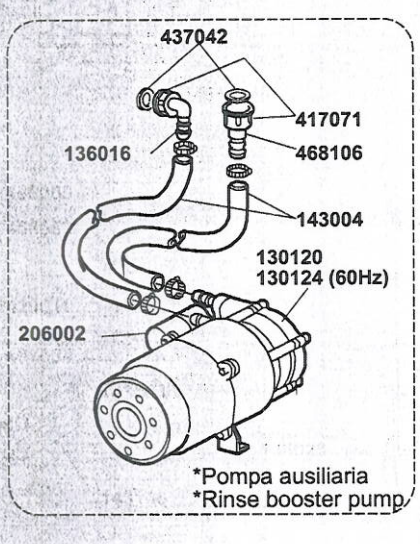
437042
417071
136016
468106
143004
130120
130124 (60Hz)
206002
*Pompa ausiliaria
*Rinse booster pump

*Optional

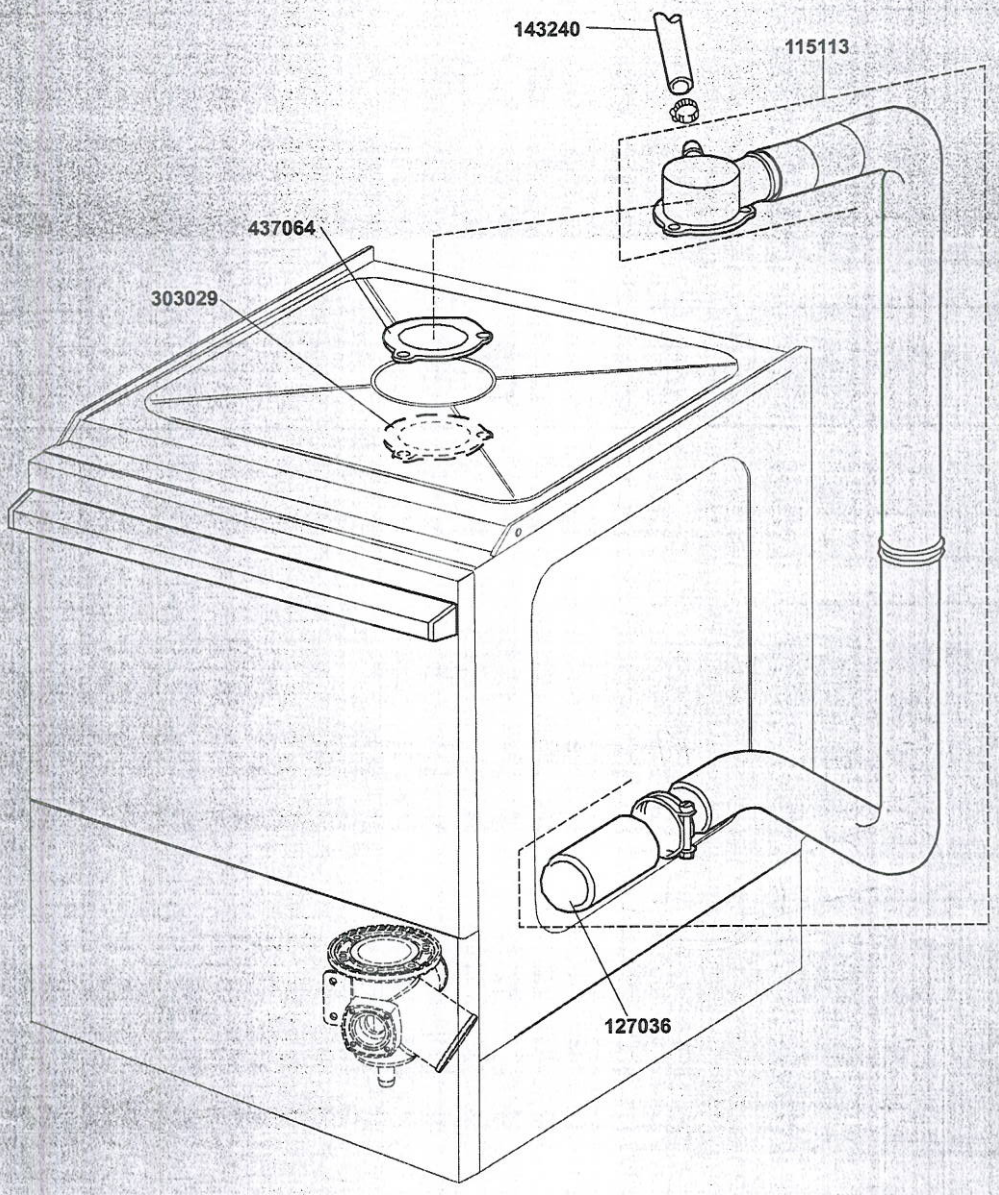
143240
115113
437064
303029
127036

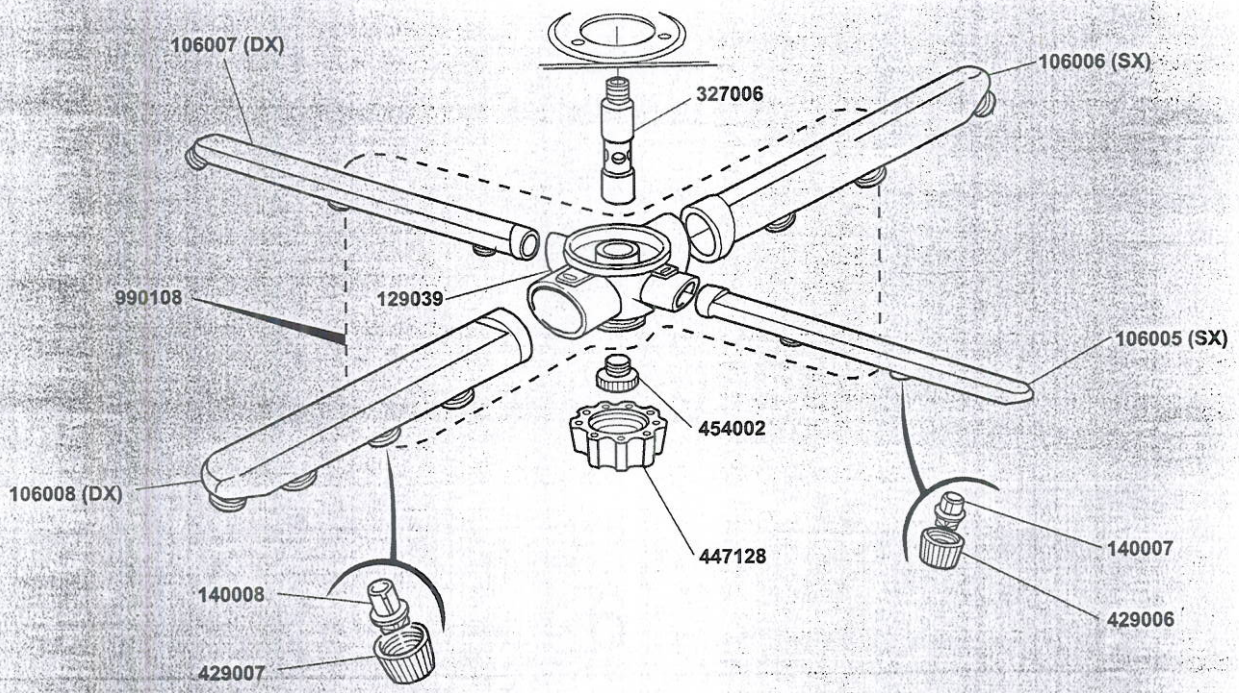
106007 (DX)
106006 (SX)
327006
990108
129039
106005 (SX)
454002
106008 (DX)
447128
140007
140008
429006
429007

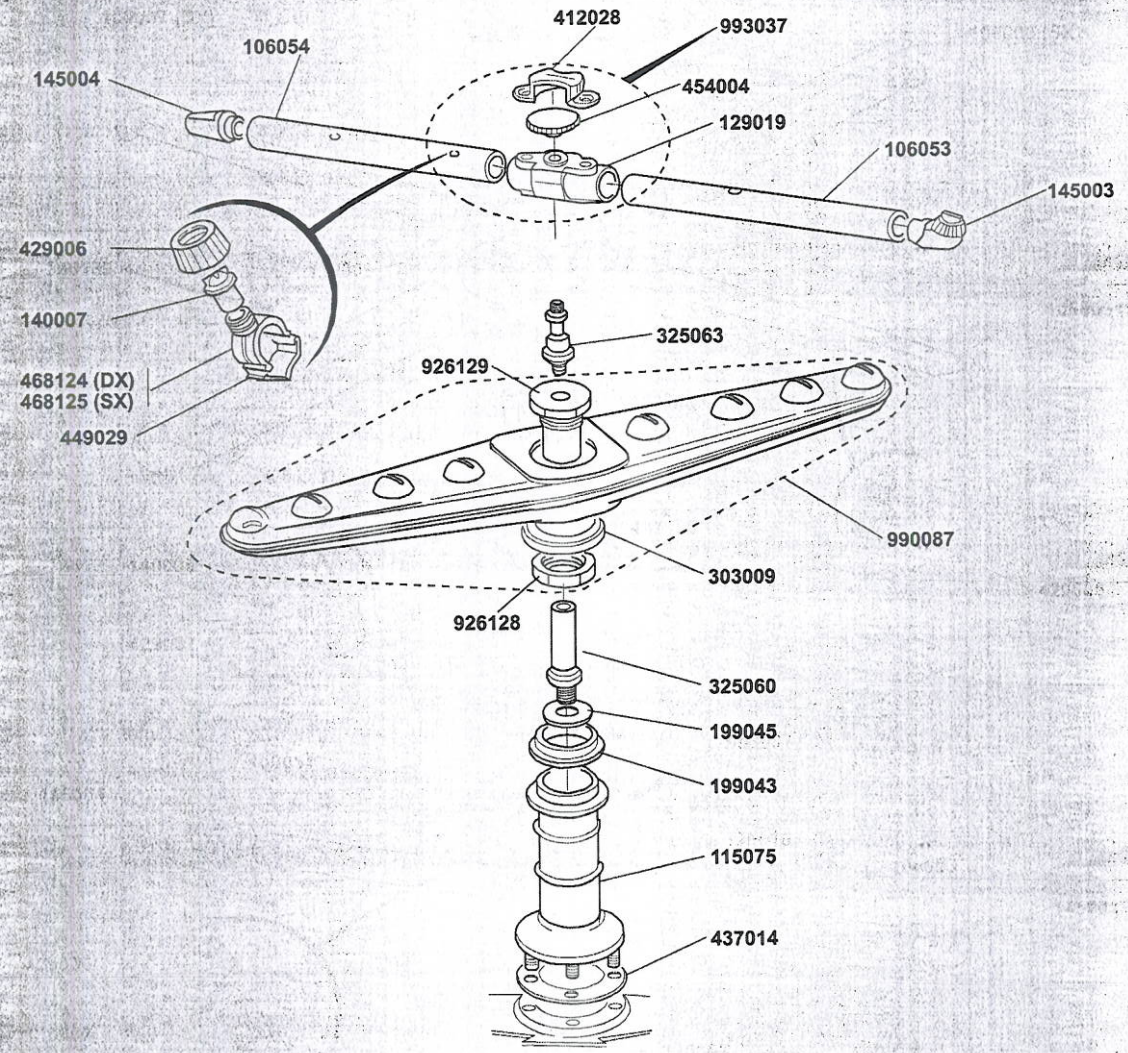
412028
993037
106054
145004
454004
129019
106053
145003
429006
140007
325063
926129
468124 (DX)
468125 (SX)
449029
990087
303009
926128
325060
199045
199043
115075
437014

B. 237

130109 (230V- 50Hz)
130119 (230V- 60Hz)

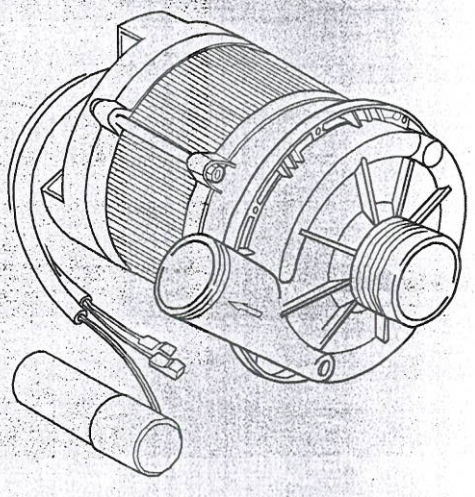

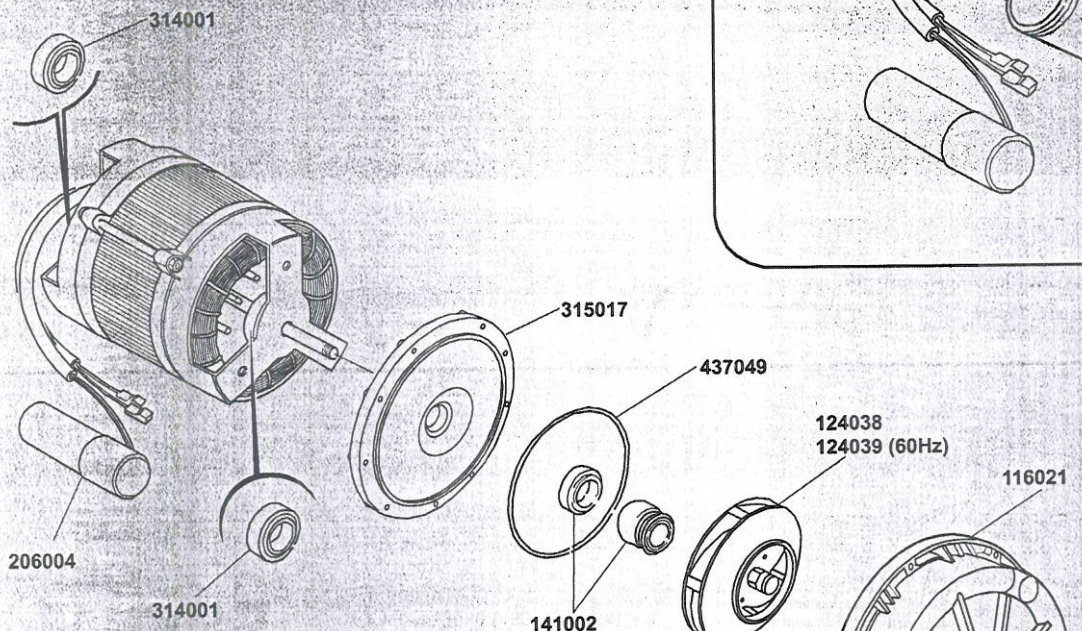

T. 173

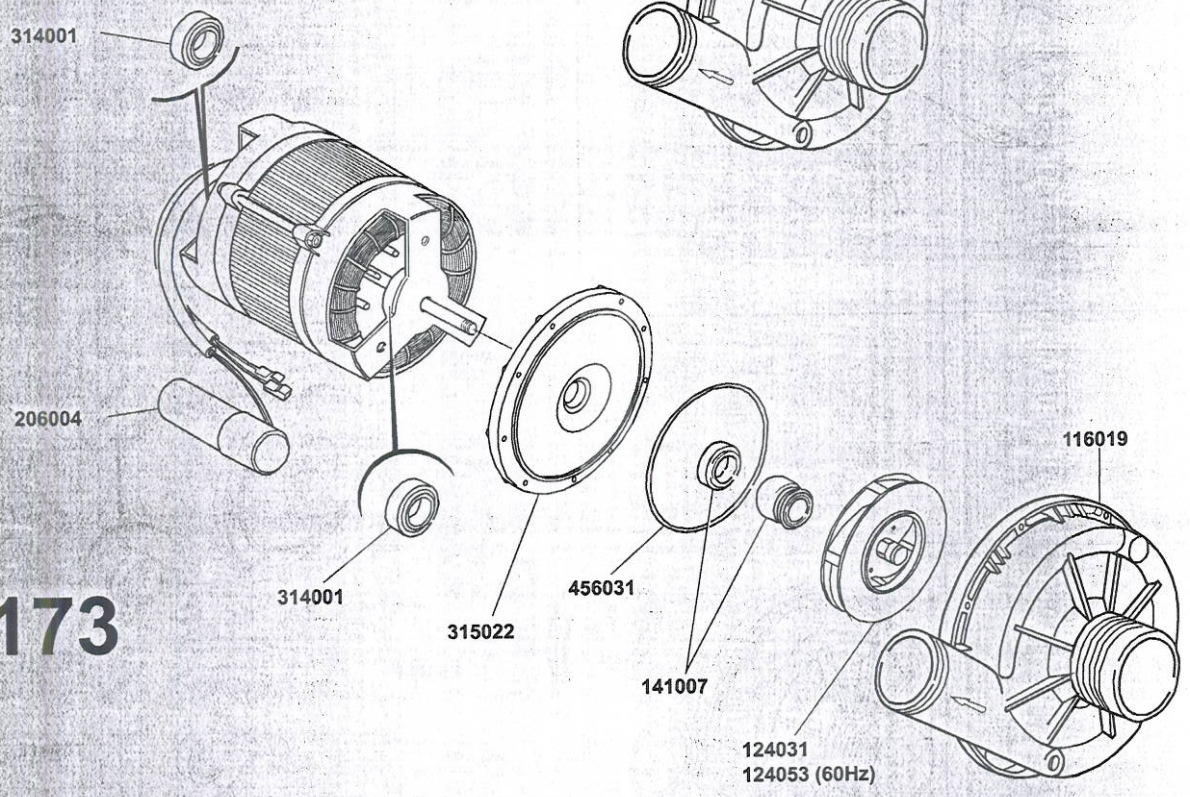

130126 (230V- 50Hz)
130133 (230V- 60Hz)

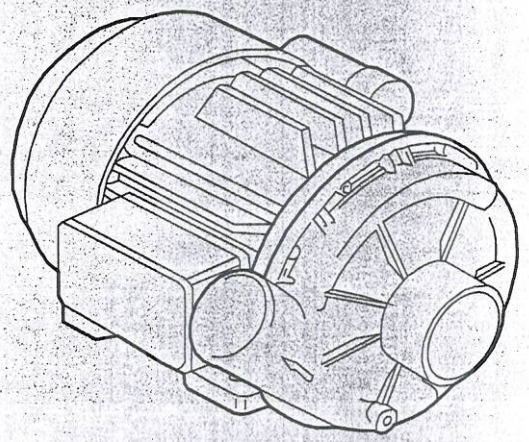

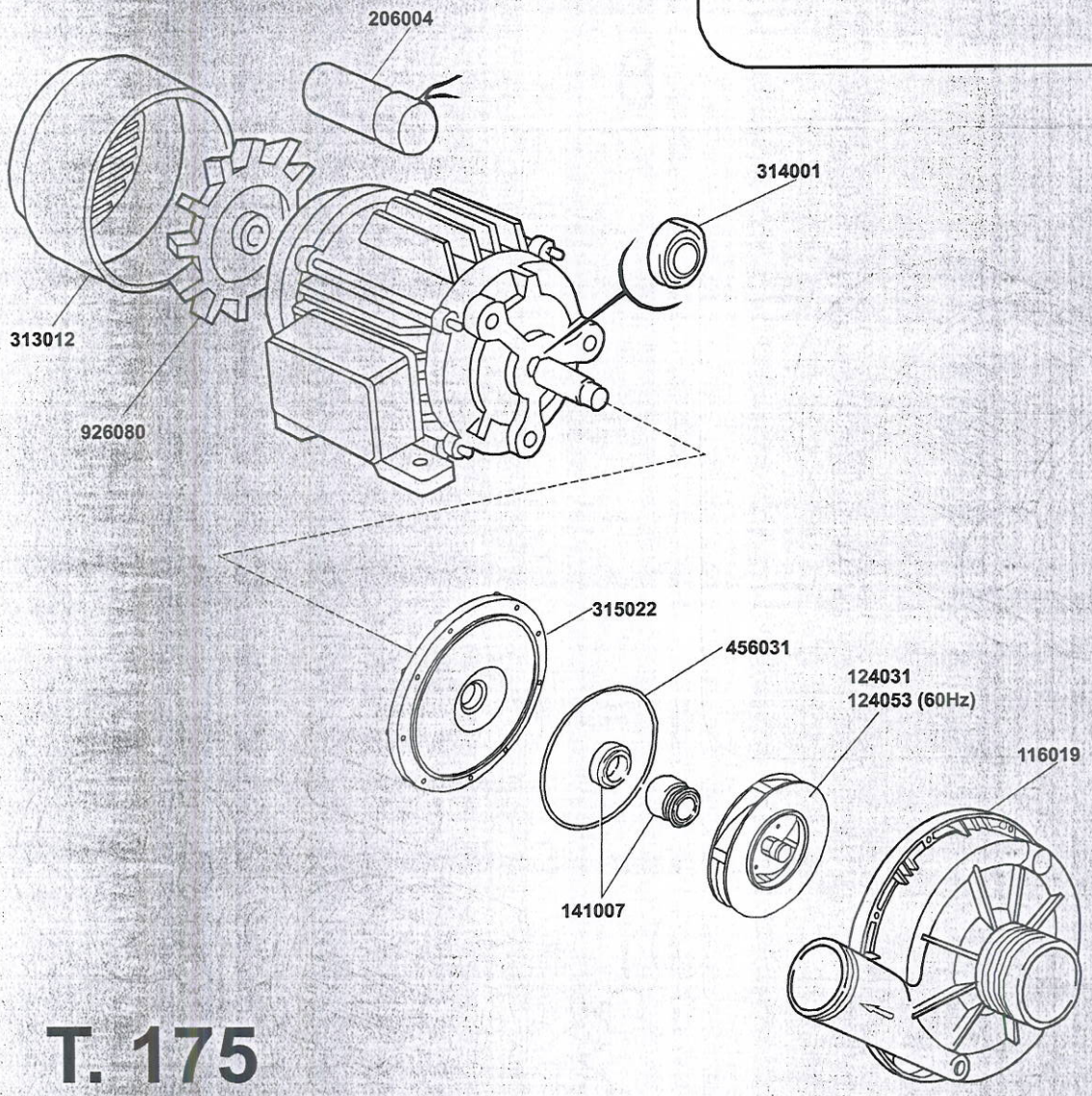

T. 175